PT2E-1691

SCAN ME

@maximal-safety

Smart Transmitter/Gas Detector Head

SD-1GH

Operating Manual

(PT2-169)

Request for the Customers

- Read and understand this operating manual before using the detector.
- Use the detector in accordance with the operating manual.
- Regardless of warranty period, we shall not make any compensation for accidents and damage caused by using this product.
  The compensation shall be made only under the warranty policy of products or parts replacement.
- Because this is a safety unit, a regular maintenance for every six months and daily maintenance must be performed.
- If any abnormality is found in the gas monitor, notify it to RIKEN KEIKI immediately.
  (Visit our Web site to find your nearest RIKEN KEIKI office.)

RIKEN KEIKI Co., Ltd.

2-7-6 Azusawa, Itabashi-ku, Tokyo, 174-8744, Japan
Phone : +81-3-3966-1113
Fax : +81-3-3558-9110
E-mail : intdept@rikenkeiki.co.jp
Web site : http://www.rikenkeiki.co.jp/

MAXIMAL INTER TRADING CO.,LTD.
113/75 Saimai Rd Saimai Saimai Bkk.
info@maximal.co.th T.0943562564

Operating Precautions

This detector is a gas detector that detects combustible gases in the air and triggers a gas alarm.
The gas detector is a safety unit, not an analyzer or densitometer which performs quantitative/qualitative analysis/measurement for gases.
Please fully understand the following points before using it, so that it can be used properly.

1. This detector may be interfered by gases and vapors other than the gas to be detected.
   Please note that the alarm may be triggered by interference. In addition, it may be fluctuated by environmental (temperature, humidity, etc.) changes in the installation site.

2. The alarm must be set within a range where the performance of the detector can be ensured.
   In facilities compliant with the High Pressure Gas Safety Act, an alarm setting below our standard alarm setpoint may trigger a false alarm.

3. This is a safety unit, not a control unit.
   The alarm contact output of the detector must be used for an external alarm lamp/buzzer, while the alarm signal output must be used for an indicator or external recorder.
   If these outputs are used to control other units, we shall not be responsible for any malfunctions.

4. The gas sensing part of the gas detection sensor installed in this detector is made of metal porous sintered alloy permeated with an oxidation catalyst.
   If silicon or sulfide compounds are accumulated on the surface of porous sintered alloy, the area of the gas sensing part becomes smaller, which may results in serious deterioration of its sensitivity.
   For safety reasons, do not use the detector under the presence of silicon or sulfide compounds even though their amount is very small.

5. For maintenance of the detector, it must go through a regular maintenance, including replacement and adjustment of the regular replacement parts as specified in the operating manual. In addition, because this is a safety unit, it is recommended that a regular maintenance and a gas calibration are performed every six months in accordance with the regulations.

<Contents>

1 Outline of the Product 2
1-1. Preface 2
1-2. Purpose of use 2
1-3. Definition of DANGER, WARNING, CAUTION, and NOTE 2

2 Important Notices on Safety 3
2-1. Danger cases 3
2-2. Warning cases 4
2-3. Precautions 5
2-4. Safety information 6

3 Product Components 7
3-1. Main unit and standard accessories 7
3-2. Names and functions for each part 8
3-3. Block diagram 9

4 How to Use 10
4-1. Before using the detector 10
4-2. Precautions for installation points 10
4-3. Precautions for system designing 11
4-4. How to install 13
4-5. How to wire 14

5 How to Operate 19
5-1. Preparation for start-up 19
5-2. Basic operating procedures 19
5-3. How to start the detector 20
5-4. Modes 22
5-5. User mode 23
5-6. How to exit 25

6 Operations and Functions 26
6-1. Gas alarm activation 26
6-2. Fault alarm activation 27
6-3. External output operation 28
6-4. Other functions 29

7 Maintenance 30
7-1. Maintenance intervals and items 30
7-2. Regular maintenance mode 32
7-3. Gas calibration method 41
7-4. Parts replacement 44

8 Storage, Relocation and Disposal 45
8-1. Procedures to store the detector or leave it for a long time 45
8-2. Procedures to relocate the detector or use it again 45
8-3. Disposal of products 45

9 Troubleshooting 46

10 Product Specifications 48
10-1. List of specifications 48
10-2. List of accessories 49
10-3. Detection principle 50

11 Definition of Terms 51

1

Outline of the Product

1-1. Preface

Thank you for choosing our smart transmitter/gas detector head SD-1GH. Please check that the model number of the product you purchased is included in the specifications on this manual.

This manual explains how to use the detector and its specifications. It contains information required for using the detector properly. Not only the first-time users but also the users who have already used the product must read and understand the operating manual to enhance the knowledge and experience before using the detector.
Although the number of digits to display varies depending on the detection range, this manual provides explanation using a detection range from 0 to 100.0 as examples (such as examples of LED display).

1-2. Purpose of use

- This detector is a fixed type gas detector head that detects leak of combustible/toxic gases and performs the alarm activation when the gas concentration is over the setting value.
- The detector is a safety unit, not an analyzer or densitometer which performs quantitative/qualitative analysis/measurement for gases. Please fully understand the features of the detector before using it, so that it can be used properly.
- The detector detects abnormalities in the air caused by presence of gases or other reasons (leak) with the built-in gas sensor. The concentrations of detected gases are displayed on the seven-segment LED.
- The detector has a built-in alarm contact and can be used either as a gas alarm, fault alarm, or common (gas, fault) alarm.
- The detector outputs gas concentration in 4 – 20 mA.

1-3. Definition of DANGER, WARNING, CAUTION, and NOTE

DANGER	This message indicates that improper handling may cause serious damage on life, health or assets.
WARNING	This message indicates that improper handling may cause serious damage on health or assets.
CAUTION	This message indicates that improper handling may cause minor damage on health or assets.
NOTE	This message indicates advice on handling.

2

Important Notices on Safety

2-1. Danger cases

DANGER

About explosion-proof

- The window plate material is a polycarbonate resin. Do not use organic solvents and alkali types (liquid or vapor). It may cause the color and shape of the window plate to be changed.
- Do not open the lid when applying current.
- Do not attempt to repair the detector.
- For the lid, use hexagon socket head bolts specified by RIKEN KEIKI.
- Do not apply a strong force or shock to the window plate. The explosion-proof performances may be deteriorated due to damages. The explosion protection conditions for the detector is "low (2J)" possibility of mechanical damage.

2-2. Warning cases

WARNING

Power supply
Before turning on the detector, always check that the voltage is properly applied. Do not use an unstable power supply because it may cause malfunctions.

Need of grounding circuit
Do not cut the grounding circuit or disconnect the wire from the grounding terminal.

Defects in protective functions
Before starting the detector, check the protective functions for defects. When seeming defects are found in the protective functions, such as protective grounding, do not start the detector.

External connection
Before connecting the detector to the external control circuit, securely connect it to a protective grounding circuit.

Zero adjustment in the atmosphere
When the zero adjustment is performed in the atmosphere, check the atmosphere for freshness before beginning the adjustment. If other gases exist, the adjustment cannot be performed properly, thus leading to dangers when the gas leaks.

Response to gas alarm
Issuance of a gas alarm indicates that there are extreme dangers. Take proper actions based on your judgment.

2-3. Precautions

CAUTION

Do not use a transceiver near the detector.
Radio wave from a transceiver near the detector or its cables may disturb indication reading. If a transceiver is used, it must be used in a place where it disturbs nothing.

To restart the detector, wait for five seconds or more before doing it.
Restarting the detector within five seconds may cause errors.

Do not use the external output of the detector to control other units.
This is not a control unit. It is not allowed to use the external output of the detector to control other units.

Do not disassemble/modify the detector, or change the settings if not necessary.
Disassembling/Modifying the detector will invalidate the warranty of the performance. Changing the settings without understanding the specifications may cause alarm malfunctions. Please use the detector properly in accordance with the operating manual.

Avoid applying organic solvents and others to the window plate for a long time.
The window plate material is a polycarbonate resin. When organic solvents (liquid or highly-concentrated vapor) and others are applied to the plate for a long time, its color and shape may be changed.

Do not forget to perform a regular maintenance.
Since this is a safety unit, a regular maintenance must be performed to ensure safety. Continuing to use the detector without performing a maintenance will deteriorate the sensitivity of the sensor, thus resulting in inaccurate gas detection.

2-4. Safety information

Necessary information for explosion proof construction of Model SD-1GH.

About Model SD-1GH

The Model SD-1GH is a fixed mount, continuous-monitoring detector head and provides a 4-20mA signal which indicates the target gas reading for use by a gas monitoring controller, recording device, or programmable controller.

Technical Data

(Protection Method)	Flameproof enclosure “d”
(Certificate numbers)	IECEx KEM 10.0036X
	KEMA 10ATEX0083 X
(Group)	II
(Category)	2G
(Type of Protection and Marking code)	Ex d IIC T5
(Equipment Protection Level)	Gb
(Ambient Temperature)	-20°C to 60°C
(Electrical Data)	Supply voltage: 24 V dc (Typ.)
	Output signal: 4 to 20 mA
(Applicable Standard)	IEC 60079-0: 2007, IEC 60079-1: 2007
	EN 60079-0: 2009, EN 60079-1: 2007
（Manual number）	PT2E-169

Installation

Installation Diagram

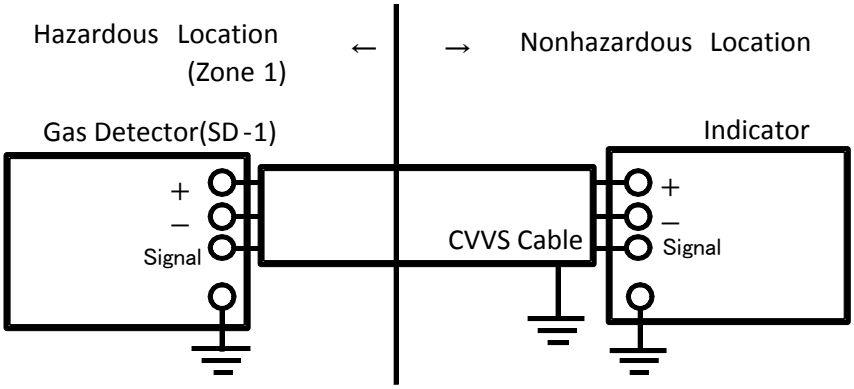

3

Product Components

3-1. Main unit and standard accessories

<Main Unit> (including a cable gland)

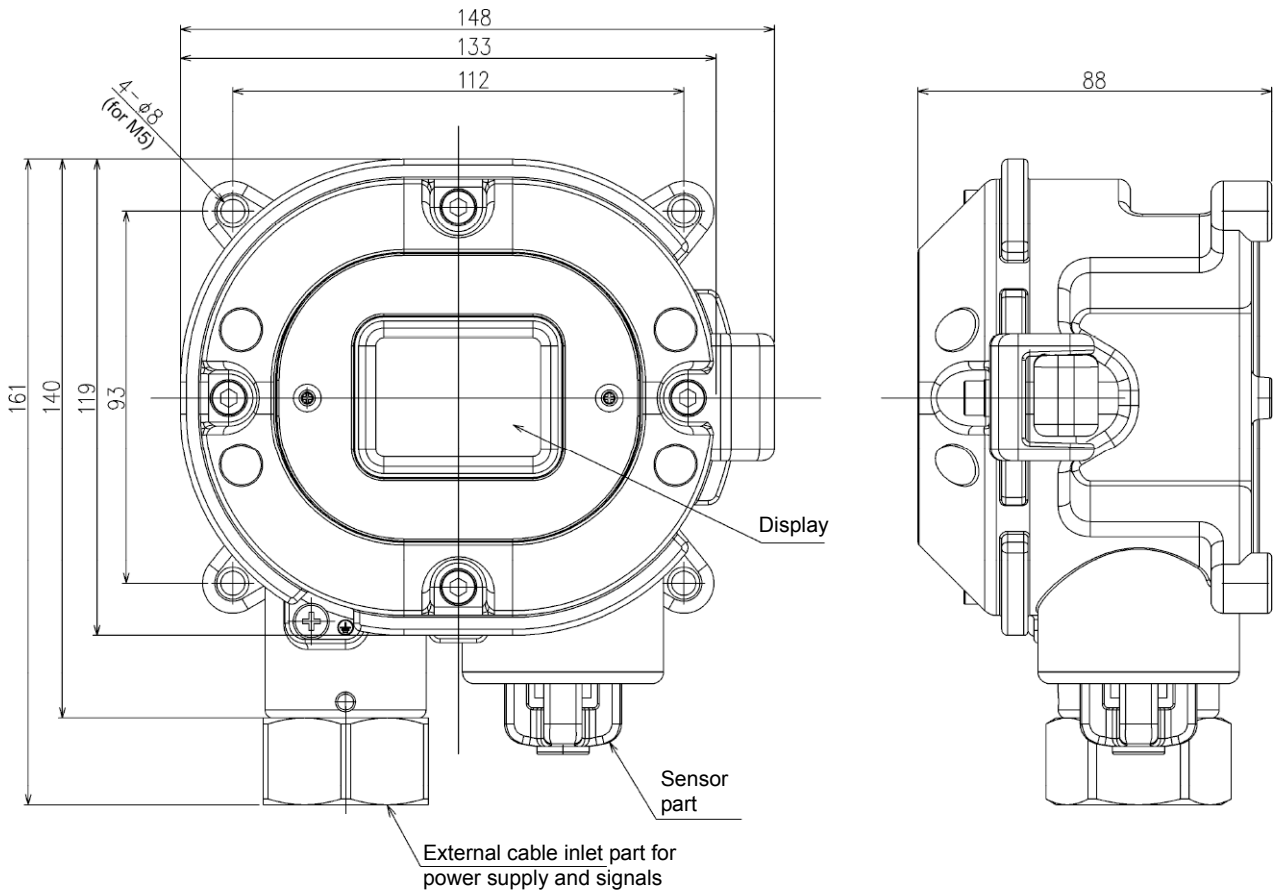

<Standard Accessories>

- Operating manual
- Dedicated handling lever (used for the wiring)
- Dedicated control key

CAUTION

Use the supplied dedicated control key to operate the detector. If products other than these accessories are used, key operations cannot be accepted properly.

3-2. Names and functions for each part

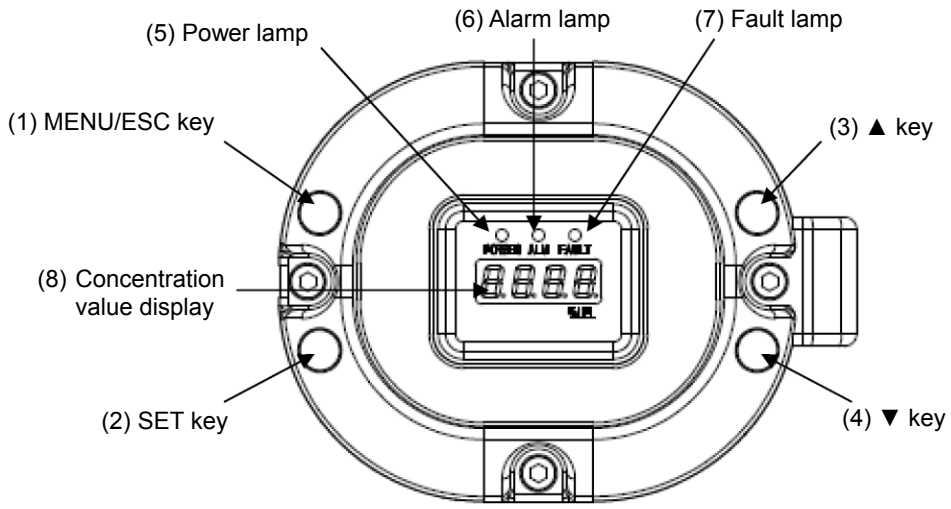

(1)	MENU/ESC key	Used to enter the maintenance mode. It is also used to cancel in a specific mode.
(2)	SET key	It is used for value confirmation and so on in a specific mode.
(3)	▲ key	Used to switch menus or change a value (UP).
(4)	▼ key	Used to switch menus or change a value (DOWN).
(5)	Power lamp	Power lamp: Detection mode: It lights up in green. Maintenance mode: It blinks in green.
(6)	Alarm lamp	Alarm lamp. It lights up in red when the alarm setpoint value is reached.
(7)	Fault lamp	Fault lamp. It lights up in yellow when an abnormality is detected in the detector.
(8)	Concentration value display	Displays the gas concentration and so on.

NOTE

- The nameplate on the front side of the detector (see the figure on the right) shows the precautions to be taken for explosion-proof performances. Read these precautions as well as "2. Important Notices on Safety."
- The detector manufactured in accordance with the overseas specifications has a nameplate on the front side that shows also the serial number, date of manufacture, etc.
  INST.No.: Serial number
  DATE: Date of manufacture

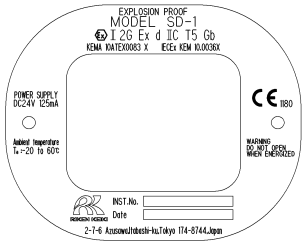

3-3. Block diagram

<Electric Diagram>

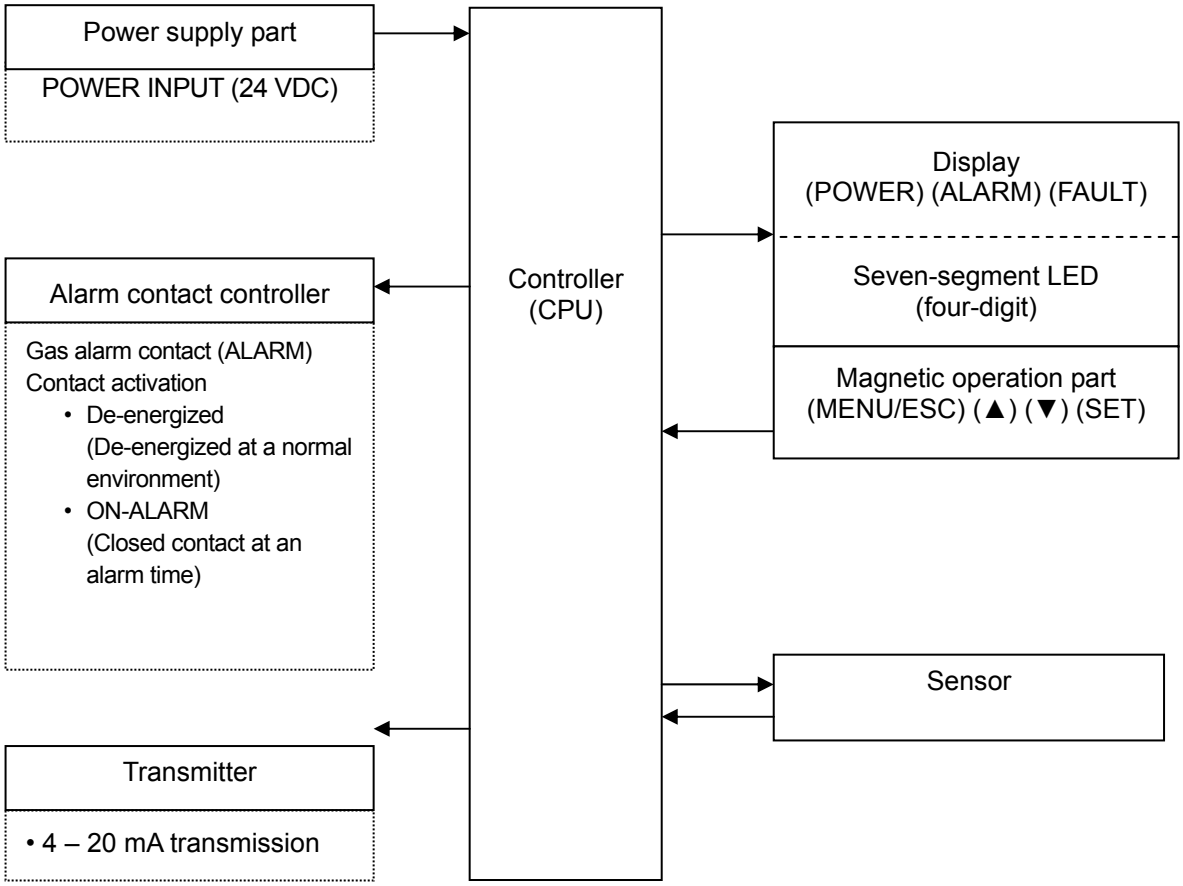

4

How to Use

4-1. Before using the detector

Not only the first-time users but also the users who have already used the product must follow the operating precautions.
Ignoring the precautions may damage the detector, resulting in inaccurate gas detection.

4-2. Precautions for installation points

CAUTION

This is a precision device. Because the detector may not provide the specified performance in some places (environments), check the environment in the installation point, and then take appropriate actions if necessary.
Because the detector plays an important role for safety and disaster prevention, as many units of the detector as needed must be installed in appropriate points.
Because points where gases leak and remain easily are different depending on the types of gases and the working areas, please decide carefully on installation points and the number of units to be installed.

Do not install the detector in a place with vibrations or shocks.
The detector consists of sensitive electronic parts. The detector must be installed in a stable place without vibrations or shocks and it cannot drop.

Do not install the detector in a place exposed to water, oil or chemicals.
When selecting installation points, avoid a place where the detector is exposed to water, oil or chemicals.

Do not install the detector in a place where the range of operating temperatures is exceeded.
The detector must be installed in a stable place where the operating temperature is maintained and do not change suddenly.
<Japanese Specifications> -20 to 53°C
<Overseas Specifications> -20 to 60°C

Do not install the detector in a place exposed to direct sunlight or sudden changes in the temperature.
When selecting installation points, avoid a place where it is exposed to direct sunlight or radiant heat (infrared rays emitted from a high-temperature object), and where the temperature changes suddenly. Condensation may be formed inside the detector, or the detector cannot adjust to sudden changes in the temperature.

Keep the detector (and its cables) away from noise source devices.
When selecting installation points, avoid a place where high-frequency/high-voltage devices exist.

Do not install the detector in a place where maintenance of the detector cannot be performed or where handling the detector involves dangers.
Regular maintenance of the detector must be performed.
Do not install the detector in a place where the machinery must be stopped when maintenance is performed in its inside, where parts of the machinery must be removed to perform maintenance, or where the detector cannot be removed because tubes or racks prevent access to it. Do not install the detector in a place where maintenance involves dangers, for example, near a high-voltage cable.

Do not install the detector in machinery which is not properly grounded.
Before installing the detector in machinery, the machinery must be grounded properly.

Do not install the detector in a place where other gases exist around it.
The detector must not be installed in a place where other gases exist around it.

4-3. Precautions for system designing

CAUTION

An unstable power supply and noise may cause malfunctions or false alarms.
The descriptions in this section must be reflected on the designing of a system using the detector.

Using a stable power supply
The external output and alarm contact of the detector may be activated when the power is turned on, when momentary blackout occurs, or while the system is being stabilized. In such cases, use a UPS, or take appropriate actions on the receiving side of output signals.
The detector must be provided with the following power supply.

Power supply voltage	24 VDC (17 – 26.4 VDC): Terminal voltage of the detector	
Allowed time of momentary blackout	Up to 10 milliseconds (To recover from the momentary blackout for 10 milliseconds or more, restart the detector.)	Example of actions To ensure continuous operation and activation, install a UPS outside the detector.
Others	Do not use it with a power supply of large power load or high-frequency noise.	Example of actions Use a line filter to avoid the noise source if necessary.

Introducing protective measures against lightning

If cables are installed outside the factory/plant, or if internal cables are installed in the same duct as the cables coming from outside the factory/plant, "lightning" will cause problems. Because lightning acts as a large emission source while cables act as a receiving antenna, devices connected to the cables may be damaged.
Lightning cannot be prevented. Cables installed in a metal conduit or under the ground cannot be completely protected from inductive lightning surge caused by lightning. Although complete elimination of disasters caused by lightning is impossible, the following protective measures can be taken.

Protection against lightning	Take appropriate measures in accordance with the importance of the facilities and the environment. • Provide protection by a lightning arrester (cable arrester). (Although inductive lightning surge can be transmitted through the cable, it is prevented by installing a lightning arrester before the field devices and central processing equipment. For information on how to use a lightning arrester, please contact the manufacturer.)
Grounding	In addition to lightning, there are more sources of surge noise. To protect units from these noise sources, the units must be grounded.

* The lightning arrester has a circuit to remove a surge voltage which damages field devices, so that signals may be attenuated. Before installing a lightning arrester, verify that it works properly.

Proper use of alarm contact

The alarm contact of the detector is used to transmit signals to activate an external buzzer, an alarm lamp or a rotating lamp. Do not use the detector for controlling purpose (e.g., controlling the shutdown valve.)

The specifications for the alarm contact of the detector are based on the resistant load conditions. If inductive load is used at the alarm contact, the following errors will occur easily because counter electromotive force is generated at the contact.

- Deposition, defective insulation or defective contact at the relay contact
- Damage of any electric parts due to high-voltage generated inside the detector
- Abnormal operations by an out-of-control CPU

CAUTION

- In principle, do not activate inductive load at the alarm contact of the detector. (In particular, never use the inductive load to activate a fluorescent lamp or motor.)
- If inductive load is activated, relay it with an external relay (contact amplification). However, because the coil of an external relay also involves inductive load, select a relay at a lower voltage (100 VAC or below), and then protect the contact of the detector with an appropriate surge absorbing part, such as a CR circuit.

If load is to be activated, appropriate measures must be taken to stabilize the operation of the detector and protect the alarm contact referring to the following information.

- Relay it with an external relay at a lower voltage of 100 VAC or below (contact amplification). At the same time, the surge absorbing part SK1 suitable for the specifications must be attached to the external relay.
- In addition, the surge absorbing part SK2 must be attached to the loaded side of the external relay if necessary.
- It may be recommended that the surge absorbing part should be attached to the contact for certain load conditions. It must be attached to an appropriate position by checking how the load is activated.

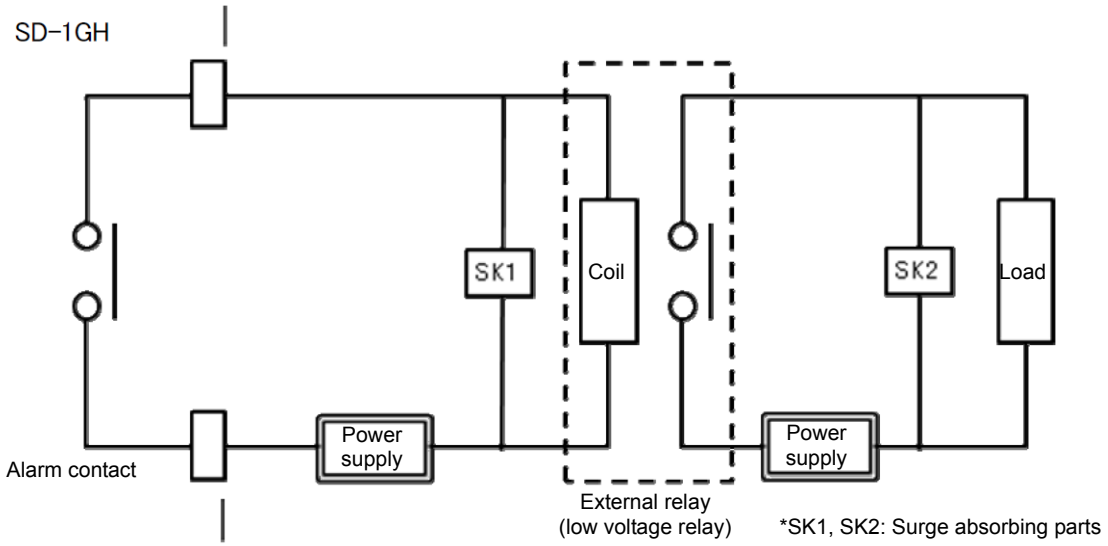

4-4. How to install

<Installation Dimensions and Maintenance Space>

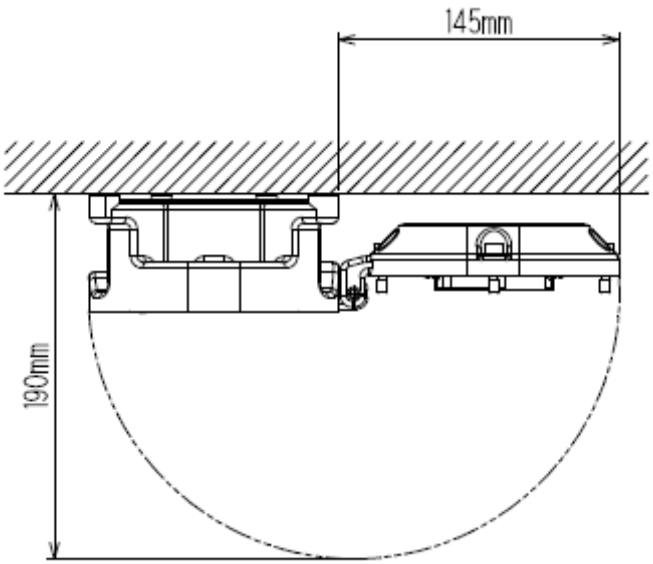

The following installation requirements must be met to install the detector.

- Attach the detector on the wall and others using four M5 screws.

CAUTION

Do not install the detector in a place where maintenance of the detector cannot be performed or where handling the detector involves dangers.

Regular maintenance of the detector must be performed.
Do not install the detector in a place where the machinery must be stopped when maintenance is performed in its inside, where parts of the machinery must be removed to perform maintenance, or where the detector cannot be removed because tubes or racks prevent access to it. Do not install the detector in a place where maintenance involves dangers, for example, near a high-voltage cable.

4-5. How to wire

CAUTION

- Be careful not to damage the internal electronic circuit when wiring. In addition, be careful not to apply stresses on the detector when (overweight) cables are installed.
- The power cables and signal cables must not be installed together with the motor power cables, etc. When these cables must be installed together for unavoidable reasons, put the power cables and signal cables in a metal conduit. The conduit must be connected to a grounding circuit.
- When stranded wires are used, prevent wires from contacting each other.
- Use the dedicated handling lever to wire.
- Use appropriate cables to wire.

<Recommended Cable>

3-wire (when the contact is not used)	CVVS1.25 sq - 3-core
5-wire (when the contact is used)	CVVS1.25 sq - 5-core

Cable overall outer diameter (mm)	Rubber seal inner diameter (mm)	Washer inner diameter (mm)
From Φ9.6 to less than Φ11	Φ11	Φ12
From Φ11 to less than Φ11.5	Φ12	Φ12
From Φ11.5 to less than Φ12	Φ12	Φ14
From Φ12 to less than Φ13	Φ13	Φ14
Φ13	Φ13.5	Φ14

NOTE

- The following table shows an example of overall outer diameters of cables. Use them for reference. The overall outer diameters must be checked because they somewhat vary between manufacturers.

Number of core	CVV 1.25sq	CVV 2sq	CVVS 1.25sq	CVVS 2sq
2	Φ9.5	Φ10.5	Φ10.0	Φ11.0
3	Φ10.0	Φ11.0	Φ10.5	Φ11.5
4	Φ10.5	Φ11.5	Φ11.0	Φ12.0
5	Φ11.5	Φ12.5	Φ12.0	Φ13.0
6	Φ12.5	Φ13.5	Φ13.0	Φ14.0

<Figure of Terminal Plate>

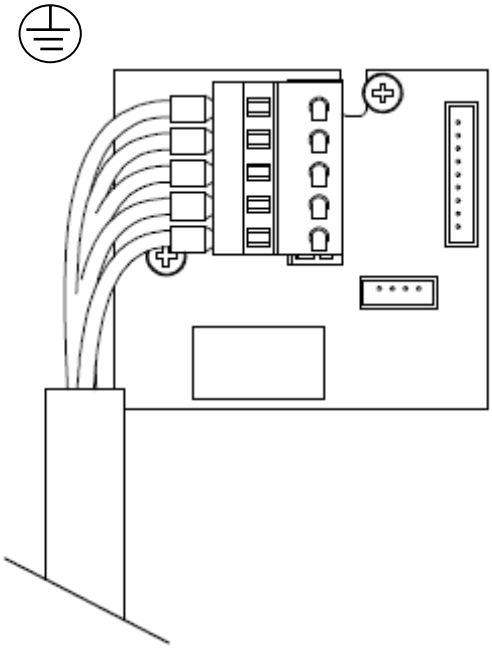

24 VDC	DC+	1
4 - 20 mA	- (Common)	2
	Sig+	3
	Contact	4
	Contact	5

Grounding terminal

<Specifications of Terminal Plate>

Specifications of terminal plate

- Rated voltage: 250 VAC
- Rated current: 12 A
  However, it depends on cables to be used.

Connection conditions

- Cables: 0.25 - 2.5 mm^2
- Bare wire length: 8 - 9 mm
- Connecting tool: Dedicated handling lever (accessory) or driver (edge 3.5 x 0.5 mm)

CAUTION

The specified bare wire length must be observed when the wire insulation is peeled off.
Improper clamping of the wire due to a shorter bare wire length may cause defective electric conduction or heating.
Catching the wire insulation due to a shorter bare wire length may cause defective electric conduction or heating.
Exposing the wire due to a longer bare wire length may cause defective insulation or a short circuit.
Be careful not to break up the wire.If the wire is broken up when inserted to the terminal, this may cause defective insulation or heating.

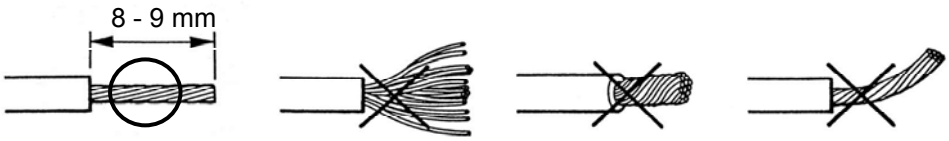

Compatible bar terminal
For a bar terminal, the following items are available.

- Bar terminal (ferrule): Model 216 Series (manufactured by WAGO)
- Crimping tool: Model VarioCrimp 4 (206-204) (manufactured by WAGO)

CAUTION

A bar terminal of the specified model must be used. Using other bar terminals invalidates the warranty of the performance.

<How to Connect to Terminal Plate>

When cables are connected to the connectors, use the dedicated lever or a flathead screwdriver to do it as shown below.

CAUTION

The right tools must be used.
In principle, one wire can be connected to one wiring hole.
When the wire is inserted into the driver slot by mistake, it does not contact the conductive part. This may cause defective electric conduction or heating.
When the wire is inserted under the spring by mistake, it does not contact the conductive part. This may cause defective electric conduction or heating.

NOTE

<How to Use the Dedicated Handling Lever>

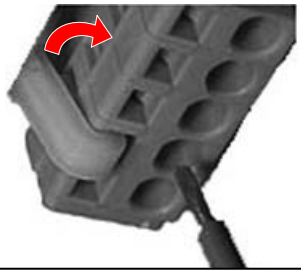

Push the lever with your finger to lower the spring in its inside.

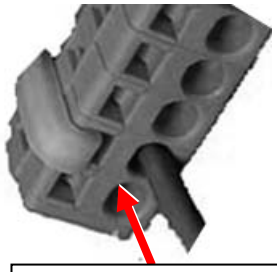

While holding down the lever, insert the wire into the (round) wiring hole until it reaches the deepest point.
Once the lever is released, the wire is secured.

To check whether the wire is connected securely, pull the wire gently. (Do not pull the wire strongly.)

<Attaching External Cable>

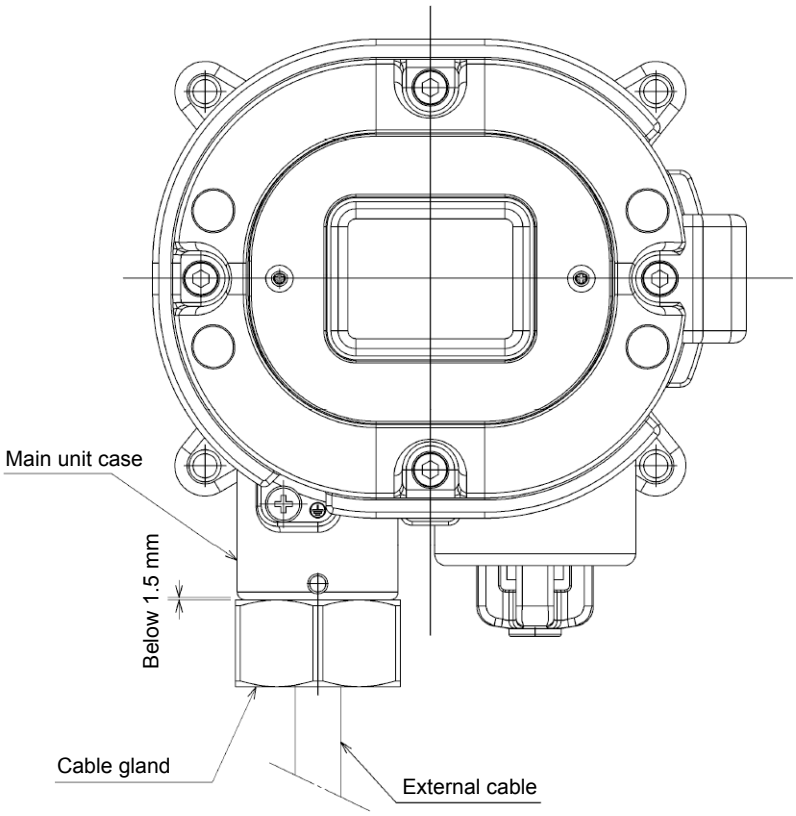

CAUTION

- Tighten a cable gland with a tool until a clearance between the cable gland and a main unit case is below 1.5 mm.
- If it is difficult to tighten the cable gland, grease its screw part and then tighten it with the tool.

<Grounding>

Connect the detector to your grounding terminal with the external terminal ⏚.

WARNING

- Before turning on the detector, do not forget to connect it to a grounding terminal.
- For stable operation of the detector and safety, it must be connected to a grounding terminal. Do not connect the grounding wire to a gas pipe.
- The grounding must be made as D type grounding (below 100 Ω of grounding resistance).
- For the grounding wire, use cable lugs to safely connect it to a grounding terminal without looseness or twist.

<Wiring Example>

Connecting to the indicator

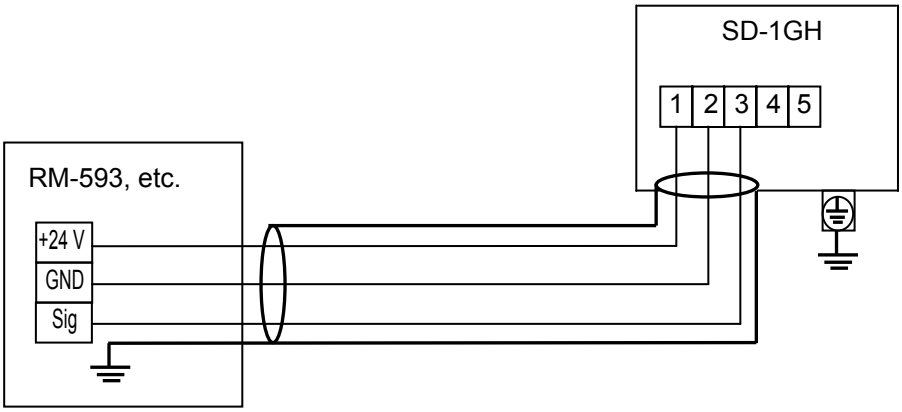

Connecting to the upper unit (DCS, PLC)

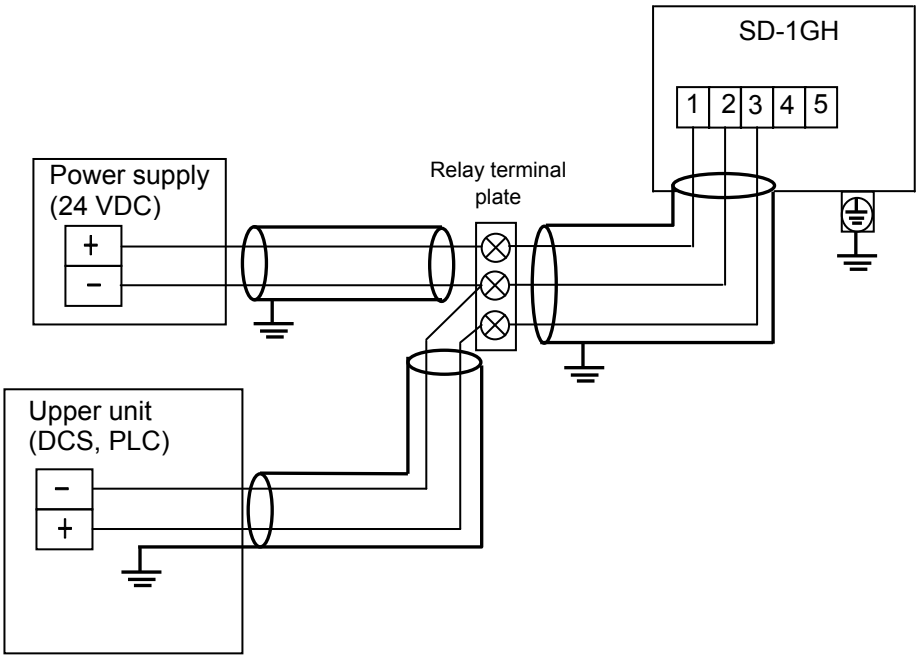

5

How to Operate

5-1. Preparation for start-up

Before supplying power, read and understand the following precautions. Ignoring these precautions may cause an electric shock or damage the detector.

- Connect the detector to a grounding circuit.
- Check that the wiring is connected to external device properly.
- Check that the power supply voltage is compliant with the specifications.
- Because the external contact may be activated during the adjustment, take measures to prevent an activated contact from having influences on external device.

5-2. Basic operating procedures

Normally, the detection mode is used for normal operations. (The detection mode is activated after the power is turned on.)

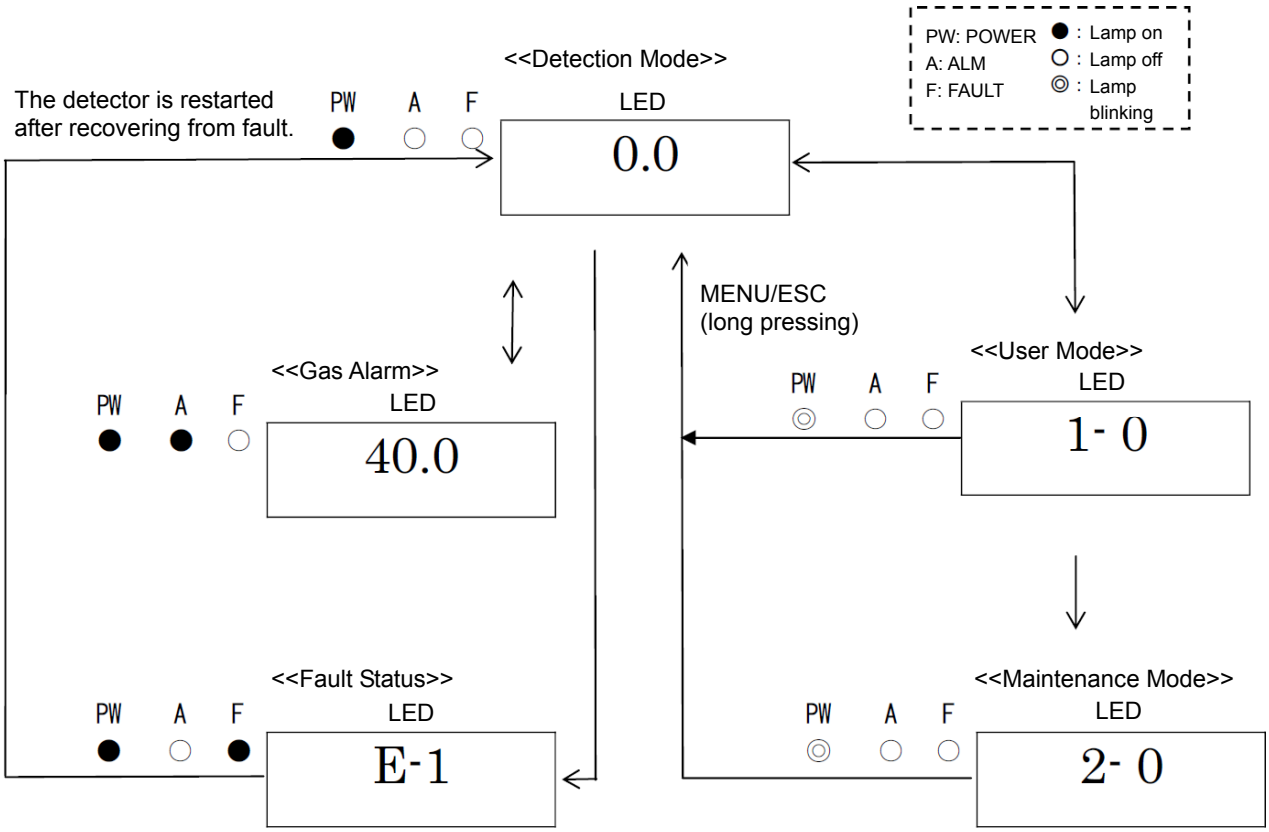

WARNING

When the detector enters other mode from the detection mode while an alarm is activated, the alarm is reset.

5-3. How to start the detector

- Before supplying power (24 VDC) to the detector, check that the detector is installed properly.
- Supply power (24 VDC) to the detector (turn on the detector).
- After the detector completes the start-up, it enters the detection mode swiftly.

CAUTION

- Do not turn off the detector during the initial clear. The detector is reading the internal memory during the initial clear.
- If the detector is installed newly or the new sensor is replaced, the sensor must be warmed up for a specified period which is determined depending on the type of the sensor after the detector is started.
- After the warm-up is completed, perform a gas calibration.

NOTE

<<Start-up Operation Procedures>> (approximately 25 seconds for system check of the detector and alarm deactivation)
Power on -> Initial clear (approximately 25 seconds) -> Detection mode

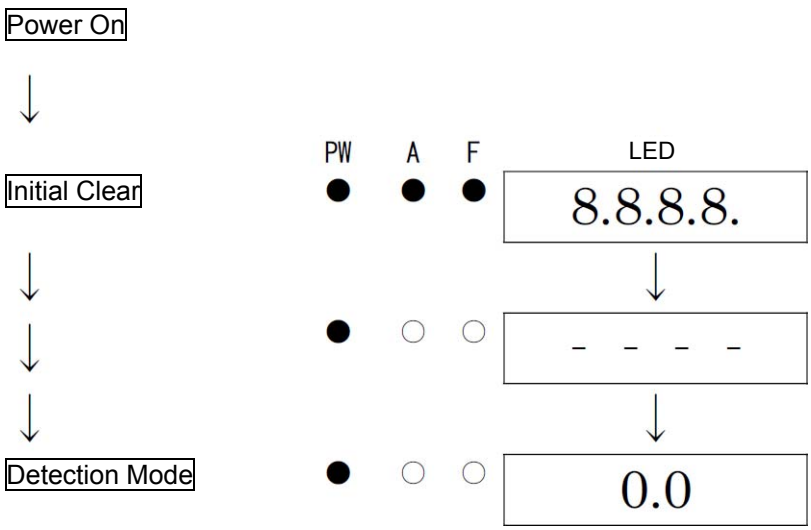

NOTE

The semiconductor sensor used in the detector must be warmed up for a specified warm-up (powered) time after power is supplied. The required warm-up (powered) time depends on the unpowered time for the sensor. The time shown in the table shown below must be met.

Unpowered time	Guidelines for warm-up (powered) time
24 hours or less	4 hours or more
72 hours or less	24 hours or more
10 days or less	2 days or more
Less than 1 month	7 days or more
Less than 3 month	14 days or more
3 months or more	1 month or more

5-4. Modes

Details on each mode are provided as follows.

CAUTION

- Do not change the settings if not necessary. Changing the settings without understanding the specifications may cause malfunctions.

Mode	Item	LED display	Details
Detection Mode		Gas concentration	Normal state
Maintenance Mode (user mode)	ROM/SUM Display	1-0	Show the program version and others. This is not typically used by the user.
	Zero Adjustment	1-1	Perform the zero adjustment.
	Setting Display	1-2	Show various setting values.
	Switch to Maintenance Mode	1-3	Switch to the regular maintenance mode.
Maintenance Mode (regular maintenance mode)	Test Mode	2-0	Perform various tests. 2-0.0 Gas Test 2-0.1 Alarm Test 2-0.2 Fault Test 2-0.3 LED Test 2-0.4 Memory Test
	Zero Adjustment	2-1	Perform the zero adjustment.
	Span Adjustment	2-2	Perform the span adjustment.
	Zero/Span Initialization	2-3	Initialize zero/span values.
	Environmental Setting	2-4	Used for various environmental settings. 2-4.0 Sensor Power Supply ON/OFF 2-4.1 INHIBIT Setting 2-4.2 Alarm Setpoint Setting 2-4.3 Alarm Delay Time Setting 2-4.4 Alarm Pattern Setting 2-4.5 Zero Suppression Pattern Setting 2-4.6 Zero Suppression Value Setting 2-4.7 Alarm Contact Specification Setting 2-4.8 Energized/De-energized Contact Setting 2-4.9 Zero Follower Selection 2-4.A Maintenance Mode External Output Setting 2-4.B External Output Adjustment 2-4.C Alarm Test External Output Setting 2-4.D Sensor Operation Start Setting 2-4.E Password Setting 2-4.F Sensor Fault Alarm Pattern Setting 2-4.H LOAD Voltage Adjustment
	Display	2-5	Display various electrical settings. This is not typically used by the user.
	Switch to Factory Mode	2-6	Not used.
	Switch to User Mode	2-7	Returns to the user mode.

5-5. User mode

WARNING

After the adjustment is completed, never fail to press MENU/ESC key to return to the detection mode.
(If the detector remains in the user mode, it automatically returns to the detection mode in ten hours.)

	PW	A	F	LED		
Detection Mode Press the MENU/ESC key for three seconds.	◎	○	○	0.0		
↓ User Mode				↓		
1-0. ROM/SUM Display Show the program version and others. This is not typically used by the user.	◎	○	○	1- 0		
				▲↓ ↑▼		
1-1. Zero Adjustment Perform the zero adjustment.	◎	○	○	1- 1	→ SET	Zero Adjustment => P24
				▲↓ ↑▼		
1-2. Various Setting Display Show various setting values.	◎	○	○	1- 2	→ SET	Setting Display => P25
				▲↓ ↑▼		
1-3. Mode Switching Switch to the maintenance mode.	◎	○	○	1- 3	→ SET	See "Regular maintenance mode".
				↓ To 1-0		

<Zero Adjustment "1-1">

This is used to perform the zero adjustment.

WARNING

When a gas calibration is performed, always perform both the zero adjustment and the span adjustment. Perform the zero adjustment and the span adjustment in this order. If they are performed in a wrong order or only one of them is performed, accurate gas detection cannot be ensured.

	PW	A	F	LED
1-1 Press SET key.	◎	○	○	1- 1
↓				↓
Current Concentration Value Display Press the SET key to perform the zero adjustment.	◎	○	○	1.0
↓				↓
Under Zero Adjustment (CAL. is displayed) Wait for a while until the adjustment is completed.	◎	○	○	CAL.
↓				↓
Zero Adjustment Completed It automatically returns to 1-1 after PASS is displayed.	◎	○	○	PASS
				↓ Return to 1-1.
* If the span adjustment failed, it automatically returns to 1-1 after FAIL is displayed.	◎	○	○	FAIL
				↓ Return to 1-1.

NOTE

- If the zero calibration failed since the zero point was significantly fluctuated from around zero, it returns to 1-1 after FAIL rather than PASS is displayed. In this case, the zero adjustment has not been completed.

<Setting Display "1-2">

Show various setting values.

	PW	A	F	LED
1-2. Press SET key.	◎	○	○	1- 2
				↓
Alarm Setpoint Display	◎	○	○	25.0
				▲ ↓ ↑ ▼
Alarm Delay Time Display (seconds)	◎	○	○	2
				▲ ↓ ↑ ▼
Zero Suppression Value Display	◎	○	○	2.0
				▲ ↓ ↑ ▼
Alarm Contact Specification Display	◎	○	○	AL.
				▲ ↓ ↑ ▼
				To 1-2

AL.: The contact is activated due to the gas alarm.
FAU.: The contact is activated due to the fault alarm.
A. or F.: The contact is activated due to the gas alarm or the fault alarm.

5-6. How to exit

To turn off the detector, turn off the power supply (24 VDC) to the detector.

WARNING

- When the detector is turned off, an alarm may be triggered on the upper (central) system.
- Before turning off the detector, INHIBIT (point skip) on the upper (central) system must be activated. Decide whether the power can be turned off by checking the operation of the devices connected to the external output or external contact output terminal of the detector.
- <u>If the alarm contact is energized (option), it is activated when the detector is turned "OFF".</u>

6

Operations and Functions

6-1. Gas alarm activation

Gas alarm: Triggered when the concentration of detected gas reaches or exceeds the alarm setpoint value.
<<Auto-Reset>>

NOTE
The alarm setpoint is factory-set. Although the alarm delay time (standard: 2 seconds) works in the detector to prevent a false activation, it can be cancelled if not needed.

<Display Operation>

Gas Concentration Display
In case of over the detection range (Over Scale), "∩∩∩∩" is displayed on the LED.

Power Indicator Lamp (POWER: Green)
During operation, this lights up continuously.

Alarm Indicator Lamp (ALM: Red)
It lights up when the alarm setpoint value is reached to or exceeded.

<Contact Activation>

The contact is activated when the gas concentration reaches or exceeds the alarm setpoint value. (only when the alarm is used)
The contact activation is reset automatically when the gas concentration drops below the alarm setpoint value.

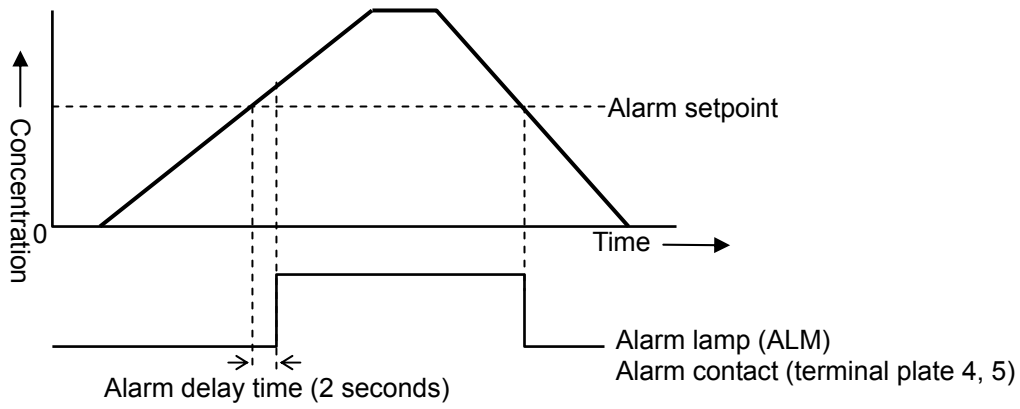

<Response to Gas Alarm>

A gas concentration value exceeds the alarm setpoint
When a gas alarm is triggered, take actions in accordance with your management rules of gas alarm. Normally, take the following actions.

- Check the reading of the detector.

NOTE
If a gas leak is momentary, the reading may already have dropped when checking it. In addition, when the alarm is triggered by noise or other incidental conditions other than a gas, the reading may have already dropped.

- Based on your management rules of gas alarm, no one can be allowed to access the monitored zone to ensure safety.
- If the gas concentration display continues to be displayed, close the main valve of the gas, and then check that the gas concentration reading dropped.
- Access the gas leak point, equipped with a protective gear to avoid dangers caused by possibly remaining gases, and check whether gases remain or not by using a portable gas detector.
- Check that the point is free from dangers, and take actions to fix the gas leak.

6-2. Fault alarm activation

A fault alarm is triggered when the detector detects abnormalities. After a fault alarm is triggered, the fault lamp (yellow) lights up and an error message is displayed on the LED. Determine the causes and take appropriate actions.
After the detector is successfully returned from the fault, it restarts with the process normally performed right after it is turned on (initial clear).
If the detector has problems and is repeatedly malfunctioning, contact RIKEN KEIKI immediately.

NOTE
For information on malfunctions (error messages), see "9. Troubleshooting".

6-3. External output operation

Signal Transmission System		Electric current transmission (non-isolated) 4 – 20 mA
Transmission Path		CVVS
Transmission Distance		CVVS 1.25 sq: Maximum 1 km
Connection Load Resistance		Below 300 Ω
1	Detection Mode (No Alarm)	4 - 20 mA (concentration output)
2	Detection Mode (Gas Alarm)	4 - 20 mA (concentration output)
3	Initial Clear	Depending on the setting of section 4. 2.5 mA setting: 2.5 mA 4 mA, HOLD, 4 - 20 mA setting: 4 mA
4	Maintenance Mode	2.5 mA setting: 2.5 mA 4 mA setting: 4 mA HOLD setting: The previous value retained 4 - 20 mA setting: 4 - 20 mA (concentration output)
5	Alarm Test	Output ON setting: 4 - 20 mA (concentration output) Output OFF setting: 4 mA
6	Fault Alarm	0.5 mA (Fixed)
7	INHIBIT	Depending on the setting of section 4. 2.5 mA setting: 2.5 mA 4 mA, HOLD, 4 - 20 mA setting: 4 mA
8	Power Off	0 mA

Example of Gas Concentration and External Output

4 - 20 mA specification
(Maintenance output: 2.5 mA setting)

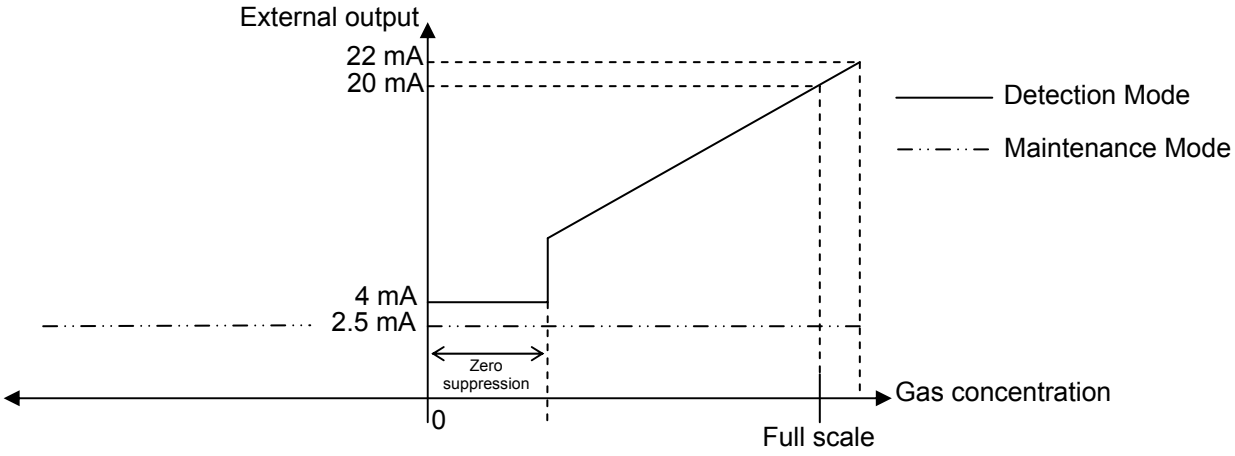

CAUTION

- The 4 - 20 mA output is already adjusted. In case of over scale, an output will not exceed 22 mA.
- Output during INHIBIT or initial clear is based on 4 - 20 mA output setting in the maintenance mode.
  In particular, when the detector is started or the specification is changed, be careful about 4-20 mA output setting. Understand how the detector functions, and take actions, if necessary, so that the signal receiver side can prepare to avoid false alarms.

6-4. Other functions

<Suppression Function>

The sensors used with the detector are influenced by environmental changes (temperature, humidity, and other characteristics) or interference gases (interference characteristics) in no small measure, which affects the reading. Therefore, the reading might be fluctuated around zero even in a normal environment.
This function obscures influences by environmental changes and interference gases around zero that have no meaning for your management rules of gas alarm. This function is used to hide (suppress) the fluctuation of the reading under the setting value, indicating zero.

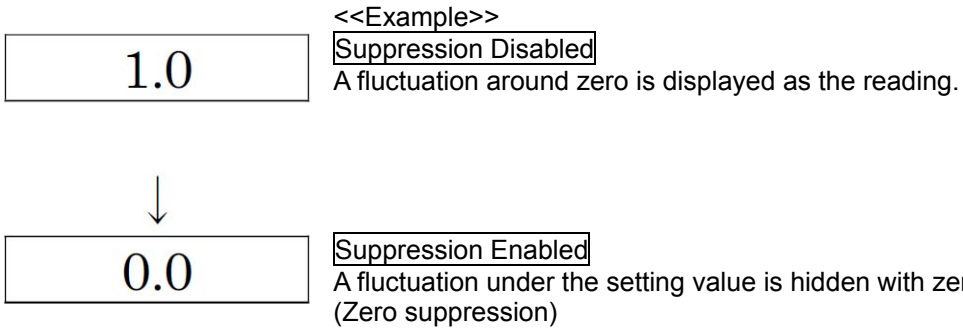

NOTE

- The suppression function is factory-set. The standard setting value is 10% FS.
- In the maintenance mode, this function is disabled and the fluctuation of the reading under the setting value is displayed.

CAUTION

A reading under zero is suppressed with the 10% FS suppression.
A reading that is 10% FS or more under zero is displayed as "-0.0", which prevents an accurate gas detection and needs the zero adjustment and span adjustment.

7

Maintenance

The detector is an important instrument for the purpose of safety.
To maintain the performance of the detector and improve the reliability of safety, perform a regular maintenance.

7-1. Maintenance intervals and items

- Daily maintenance: Perform a maintenance before beginning to work.
- Monthly maintenance: Perform maintenance on the alarm circuit (alarm test) once a month.
- Regular maintenance: Perform maintenance once or more for every six months to maintain the performance as a safety unit.

Maintenance item	Maintenance content	Daily maintenance	Monthly maintenance	Regular maintenance
Power Supply Check	Check that the power lamp lights up.	○	○	○
Concentration Display Check	Check that the concentration display value is zero. When the reading is incorrect, perform the zero adjustment and span adjustment after ensuring that no other gases exist around it.	○	○	○
Alarm Test	Inspect the alarm circuit by using the alarm test function.	–	○	○
Span Adjustment	Perform the span adjustment by using the calibration gas.	–	–	○
Gas Alarm Check	Check the gas alarm by using the calibration gas.	–	–	○

<About Maintenance Services>

- We provide services on regular maintenance including span adjustment, other adjustments and maintenance.
  To make the calibration gas, dedicated tools, such as a gas cylinder of the specified concentration and gas sampling bag must be used.
  Our qualified service engineers have expertise and knowledge on the dedicated tools used for services, along with other products. To maintain the safety operation of the detector, please use our maintenance service.
- The followings are typical maintenance services. For more information, please contact RIKEN KEIKI.

Main Services

Power Supply Check	:	Checks the power supply voltage. Verifies that the power lamp lights up. (Verifies that relevant points can be identified on the system.) (When a UPS (uninterruptible power system) is used, checks the operation with the UPS.)
Concentration Display Check	:	Verifies that the concentration display value is zero (or 20.9 vol% on the oxygen deficiency meter) by using the zero gas. Performs the zero adjustment (fresh air adjustment) if the reading is incorrect.
Flow Rate Check	:	Checks the flow rate indicator to find abnormalities. Checks the flow rate by using an external flow meter to verify the correctness of the flow rate indicator on the detector. If the flow rate is incorrect, performs the flow rate adjustment.
Filter Check	:	Checks the dust filter for dust or clogging. Replaces a dirty or clogged dust filter.
Alarm Test	:	Inspects the alarm circuit by using the alarm test function. • Checks the alarm lamps. (Checks each activation of ALM1 and ALM2.) • Checks the external alarm. (Checks the activation of the external alarm, such as a buzzer.)
Span Adjustment	:	Performs the span adjustment by using the calibration gas.
Gas Alarm Check	:	Checks the gas alarm by using the calibration gas. • Checks the alarm. (Checks the alarm activation when the alarm setpoint is reached.) • Checks the delay time. (Checks time to delay until the alarm is triggered.) • Checks the alarm lamps. (Checks each activation of ALM1 and ALM2.) • Checks the external alarm. (Checks the activation of external alarms, such as a buzzer and reset signal.)
Cleaning and Repair of Detector (visual diagnosis)	:	Checks dust or damage on surface, cover, or internal parts of the detector, clean and repair such parts of the detector. Replaces parts which are cracked or damaged.
Detector Operation Check	:	Uses the keys to check the operation of functions and parameters.
Replacement of Consumable Parts	:	Replaces consumable parts, such as a sensor, filter and pump.

7-2. Regular maintenance mode

WARNING

After the adjustment is completed, never fail to press MENU/ESC key to return to the detection mode.
(If the detector remains in the regular maintenance mode, it automatically returns to the detection mode in ten hours.)

Mode	Item	LED display	Details
Maintenance Mode (regular maintenance mode)	Test Mode	2-0	Perform various tests. 2-0.0 Gas Test 2-0.1 Alarm Test 2-0.2 Fault Test 2-0.3 LED Test 2-0.4 Memory Test
	Zero Adjustment	2-1	Perform the zero adjustment.
	Span Adjustment	2-2	Perform the span adjustment.
	Zero/Span Initialization	2-3	Initialize zero/span values.
	Environmental Setting	2-4	Used for various environmental settings. 2-4.0 Sensor Power Supply ON/OFF 2-4.1 INHIBIT Setting 2-4.2 Alarm Setpoint Setting 2-4.3 Alarm Delay Time Setting 2-4.4 Alarm Pattern Setting 2-4.5 Zero Suppression Pattern Setting 2-4.6 Zero Suppression Value Setting 2-4.7 Alarm Contact Specification Setting 2-4.8 Energized/De-energized Contact Setting 2-4.9 Zero Follower Selection 2-4.A Maintenance Mode External Output Setting 2-4.B External Output Adjustment 2-4.C Alarm Test External Output Setting 2-4.D Sensor Operation Start Setting 2-4.E Password Setting 2-4.F Sensor Fault Alarm Pattern Setting 2-4.H LOAD Voltage Adjustment
	Display	2-5	Display various electrical settings. This is not typically used by the user.
	Switch to Factory Mode	2-6	Not used.
	Switch to User Mode	2-7	Returns to the user mode.

User Mode
In "1-3.", press the SET key.

PW ◎ A ○ F ○ LED 1- 3

↓

Then press the SET key again for three seconds.

◎ ○ ○ - - - -

↓ Regular Maintenance Mode

2-0. Test Mode
Perform various tests.

◎ ○ ○ 2- 0 → SET Test Mode => P35

▲ ↓ ↑ ▼

2-1. Zero Adjustment
Perform the zero adjustment.

◎ ○ ○ 2- 1 → SET Zero Adjustment => P42

▲ ↓ ↑ ▼

2-2. Span Adjustment
Perform the span adjustment.

◎ ○ ○ 2- 2 → SET Span Adjustment => P43

▲ ↓ ↑ ▼

2-3. Zero/Span Initialization
Initialize the zero/span adjustment after the sensor is replaced.

◎ ○ ○ 2- 3

▲ ↓ ↑ ▼

2-4. Environmental Setting
Set various operations and functions.

◎ ○ ○ 2- 4 → SET Environmental Setting => P40

2-4.0 and 2-4.3 to 2-4.H are factory-set. They are not typically used by the user.

▲ ↓ ↑ ▼

2-5. Various Electrical Settings Display
Display various electrical settings. This is not used by the user.

◎ ○ ○ 2- 5

▲↓ ↑▼

2-6.
Enter the factory mode. This is not used by the user.

◎ ○ ○ 2-6

▲↓ ↑▼

2-7.
Return to the user mode.

◎ ○ ○ 2-7 → SET rET. is displayed. Press the SET key again to return to the user mode.

▲↓ ↑▼

To 2-0. Test Mode

<Alarm Test Mode "2-0">

	PW	A	F	LED		
2-0 Press SET key.	◎	○	○	2-0		
↓				▲ ↓ ↑ ▼		
2-0.0 Gas Test	◎	○	○	2-0.0	→ SET	Gas Test => P36
↓				▲ ↓ ↑ ▼		
2-0.1 Alarm Test	◎	○	○	2-0.1	→ SET	Alarm Test =>P37
↓				▲ ↓ ↑ ▼		
2-0.2 Fault Test	◎	○	○	2-0.2	→ SET	Fault Test => P38
↓				▲ ↓ ↑ ▼		
2-0.3 LED Test	◎	○	○	2-0.3	→ SET	LED Test => P38
↓				▲ ↓ ↑ ▼		
2-0.4 Memory Test	◎	○	○	2-0.4	→ SET	Memory Test => P39
				▲ ↓ ↑ ▼		
				To 2-0.0		

WARNING

- Before starting the alarm test (transmission test), provide a notification to the related sections so that they can prepare for false abnormalities (external output signals and alarm contact). After the test is completed, never fail to press MENU/ESC key to return to the detection mode. (If the detector remains in the alarm test mode, it automatically returns to the detection mode in ten hours.)
- In the alarm test mode, the gas concentration equal to the reading is output even in the maintenance mode depending on the setting. Take actions, if necessary, so that the signal receiver side can prepare to avoid false alarms.

<Gas Test "2-0.0">

	PW	A	F	LED
2-0.0 Press SET key.	◎	○	○	2-0.0
↓				↓
Introduce the test gas and perform the gas test.	◎	○	○	0.0
				↓
	◎	●	○	40.0
				↓
Stop introducing the test gas. When the reading drops, press the MENU/ESC key to cancel the test and to go back to the original state.	◎	○	○	0.0
				↓
				To 2-0.0

WARNING

Because the contact and gas concentration output can be activated by a gas test even in the maintenance mode depending on setting, be careful to perform the test.

<Alarm Test "2-0.1">

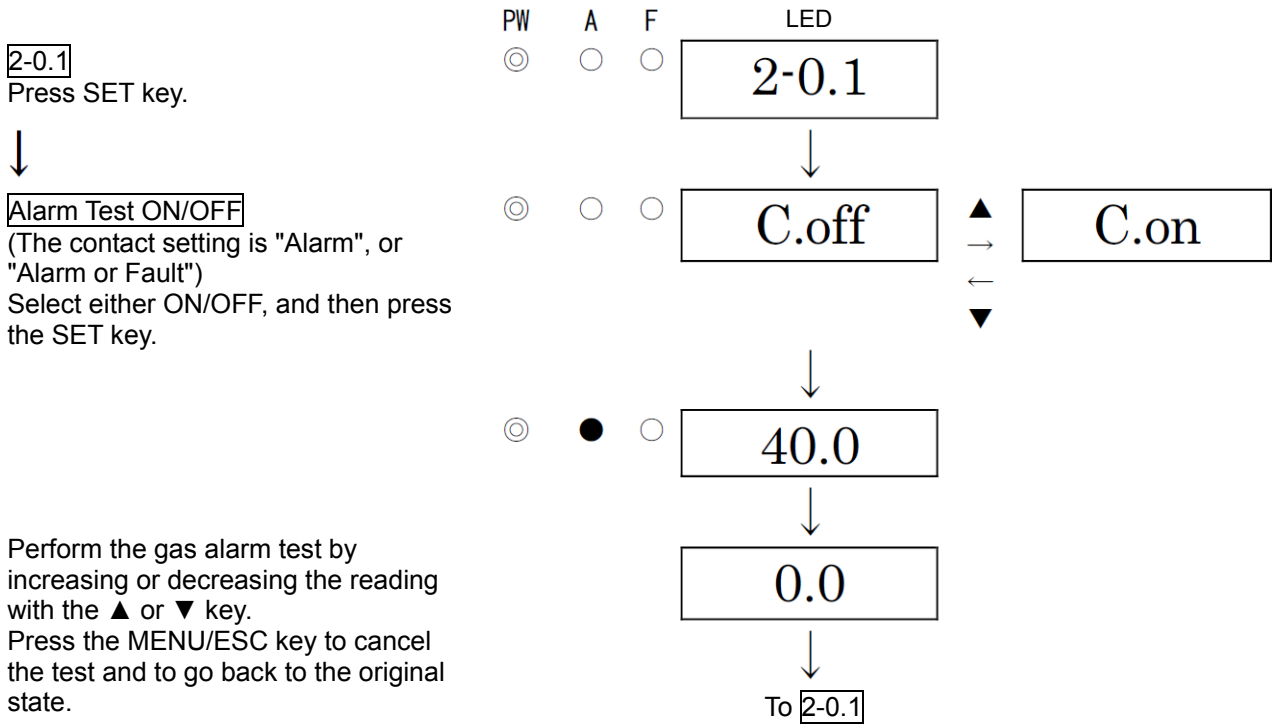

WARNING

Because the contact and gas concentration output can be activated by an alarm test even in the maintenance mode depending on setting, be careful to perform the test.

<Fault Alarm Test "2-0.2">

2-0.2
Press SET key.

↓

Fault Test ON/OFF
Select either ON/OFF.
Switch ON and press the SET key to trigger the fault alarm.
Return to OFF and press the SET key to cancel the test.
(Pressing the MENU/ESC key also enables to cancel the test and to go back to the original state.)

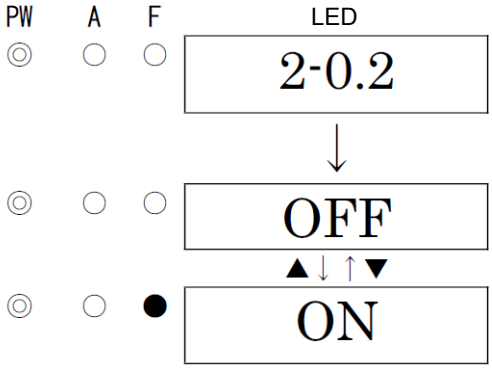

WARNING

Because the contact and gas concentration output can be activated by a fault alarm test even in the maintenance mode depending on setting, be careful to perform the test.

<LED Test "2-0.3">

2-0.3
Press SET key.

↓

LED Test ON/OFF
Select either ON/OFF.
Switch ON and press the SET key to turn on the LEDs (POWER, ALM, FAULT) and to display the gas concentration of 8.8.8.8.
Return to OFF and press the SET key to cancel the test.
(Pressing the MENU/ESC key also enables to cancel the test and to go back to the original state.)

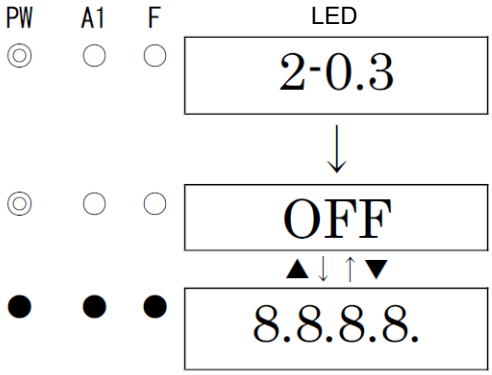

<Memory Test "2-0.4">

	PW	A	F	LED
2-0.4 Press SET key.	◎	○	○	2-0.4
↓				↓
When StA. is displayed, press the SET key again.	◎	○	○	StA.
				↓
When CAL. is displayed, the memory diagnosis is performed.	◎	○	○	CAL.
				↓
When memory is correct as a result of the diagnosis, PASS is displayed. Press the SET key to go back to the original state.				PASS
				↓
				To 2-0.4

NOTE

When abnormalities are found in memory as a result of the diagnosis, PASS is not displayed. F-RA is displayed for the RAM fault, and F-RO is displayed for the ROM fault. For both the RAM fault and ROM fault, F-RA and F-RO are displayed alternately.

<Environmental Setting "2-4">

Set various operations and functions in the environmental setting.

<<Environmental Setting 1>>
2-4. Environmental Setting
Press SET key.

PW ◎ A1 ○ F ○ LED: 2- 4

↓

2-4.0
They are factory-set and not typically used by the user.

LED: 2-4.0

▲↓ ↑▼

2-4.1 INHIBIT Setting
Set Inhibit.
Select either ON/OFF, and then press the SET key to confirm the selection.
When ON is selected, in the detection mode InHI. and 0.0 (gas concentration value) are displayed on the LED alternately. As a result, an alarm is not triggered to external device.

PW ◎ A1 ○ F ○ LED: 2-4.1 ⇔ SET: OFF ▲↓ ↑▼ ON

2-4.2 Alarm Setpoint Setting
Set the alarm setpoint.

PW ◎ A1 ○ F ○ LED: 2-4.2 ⇔ SET: Alarm Setpoint Setting => P40

▲↓ ↑▼

2-4.3 to 2-4.H
They are factory-set and not typically used by the user.

PW ◎ A1 ○ F ○ LED: 2-4.3～2-4.H

▲↓ ↑▼

To 2-4.0

<Alarm Setpoint Setting "2-4.2">

2-4.2
Press SET key.

PW ◎ A ○ F ○ LED: 2-4.2

↓

Alarm Setpoint Setting
Select the number by pressing the ▲ or ▼ key, and then press the SET key to confirm the value. (Press the MENU/ESC key to go back to the original state.)

PW ◎ A ○ F ○ LED: 25.0

↓

Return to 2-4.2.

7-3. Gas calibration method

Perform a gas calibration in each mode (zero adjustment mode and span adjustment mode) using the calibration gas.

- Zero adjustment gas
- Span adjustment gas (collected in a gas sampling bag)
- Gas sampling bags

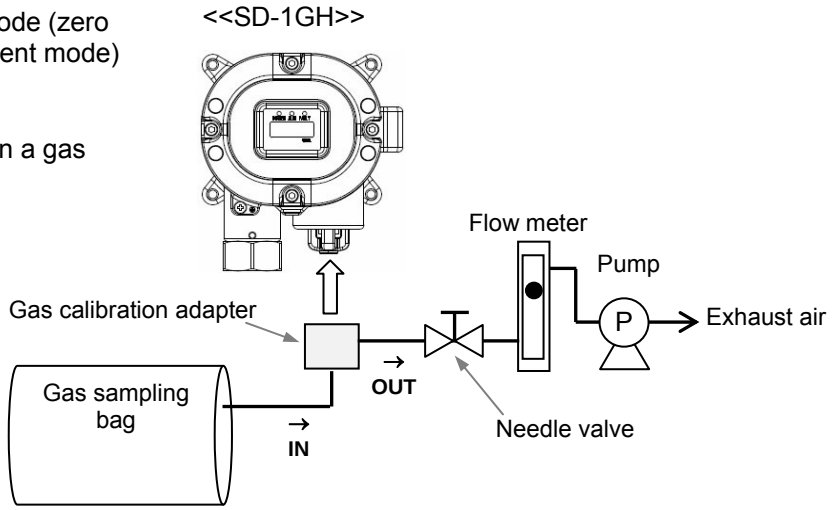

WARNING

When a gas calibration is performed, always perform both the zero adjustment and the span adjustment. Perform the zero adjustment and the span adjustment in this order. If they are performed in a wrong order or only one of them is performed, accurate gas detection cannot be ensured.

<Zero Adjustment "2-1">

This is used to perform the zero adjustment.

WARNING

When the zero adjustment is performed in the atmosphere, check the atmosphere for freshness before beginning the adjustment. If other gases exist, the adjustment cannot be performed properly, thus leading to dangers when the gas leaks.

NOTE

- Before starting the zero adjustment, provide the detector with the zero adjustment gas and wait until the indicator is stabilized.

	PW	A	F	LED
2-1 Press SET key.	◎	○	○	2- 1
↓				↓
Current Concentration Value Display Press the SET key to perform the zero adjustment.	◎	○	○	2.5
↓				↓
Under Zero Adjustment (CAL. is displayed) Wait for a while until the adjustment is completed.	◎	○	○	CAL.
↓				↓
Zero Adjustment Completed It automatically returns to 2-1 after PASS is displayed.	◎	○	○	PASS
				↓ Return to 2-1.
* If the zero adjustment failed, it automatically returns to 2-1 after FAIL is displayed.	◎	○	○	FAIL
				↓ Return to 2-1.

NOTE

- If the zero calibration failed since the zero point was significantly fluctuated from around zero, it returns to 2-1 after FAIL rather than PASS is displayed. In this case, the zero adjustment has not been completed.

<Span Adjustment "2-2">

This is used to perform the span adjustment.

CAUTION

- Before starting the span adjustment, provide the detector with the span adjustment gas and wait until the indicator is stabilized.

	PW	A	F	LED
2-2 Press SET key.	◎	○	○	2- 2
↓				↓
Gas Introduction Introduce a gas, and then press the SET key when the reading is stabilized. * In case of less than 10% F.S., this cannot be set.	◎	○	○	12.5
↓				↓
Span Adjustment When the reading blinks, adjust to the introduced gas concentration by pressing the ▲ or ▼ key. After adjusting the value, press the SET key.	◎	○	○	40.0
↓				↓
Span Adjustment Completed It automatically returns to 2-2 after PASS is displayed.	◎	○	○	PASS
↓				↓
Stop of Gas Introduction				Return to 2-2.
* If the span adjustment failed, it automatically returns to 2-2 after FAIL is displayed.	◎	○	○	FAIL
↓				↓
Stop of Gas Introduction				Return to 2-2.

NOTE

- If the span adjustment failed since the reading was significantly fluctuated from the introduced gas concentration, it returns to 2-2 after FAIL rather than PASS is displayed . In this case, the span adjustment has not been completed.
  Check if the correct concentration span adjustment gas has been provided and check the gas adjustment tool for a gas leak. If there are mistakes, perform the span adjustment again.
  If the span adjustment cannot be performed even when there is no mistake or after recalibration, the gas sensor life might have expired. After turning off the power supply, please contact RIKEN KEIKI.

7-4. Parts replacement

<Sensor Replacement>

Our service engineers need to replace the sensor and perform the gas calibration.
Please contact RIKEN KEIKI.

NOTE

The gas calibration using the standard gas is required after the sensor is replaced. Please request it to RIKEN KEIKI.

<Replacement of Regular Replacement Parts>

List of recommended regular replacement parts

No.	Item	Maintenance intervals	Replacement intervals (year)	Quantity (pieces/unit)
1	Rubber seal (for the sensor)	1 year	3 - 6 years	1

NOTE

- The above replacement intervals are recommendation only. The intervals may change depending on the operating conditions. These intervals do not mean the warranty periods either. The result of the regular maintenance may determine when to replace the parts.

8

Storage, Relocation and Disposal

8-1. Procedures to store the detector or leave it for a long time

The detector must be stored under the following environmental conditions.

- In a dark place under the normal temperature and humidity away from direct sunlight
- In a place where gases, solvents or vapors are not present

8-2. Procedures to relocate the detector or use it again

When the detector is relocated, select a new place in accordance with “4-2. Precautions for installation points” and “4-4. How to install”.
For information on wiring, see "4-5. How to wire". The unpowered time must be minimized when the detector is relocated.

CAUTION

- When using a relocated or stopped/stored detector again, do not forget to perform a gas calibration. For information on readjustment including a gas calibration, please contact RIKEN KEIKI.

8-3. Disposal of products

When the detector is disposed of, it must be treated properly as an industrial waste in accordance with the local regulations.

9

Troubleshooting

The Troubleshooting does not explain the causes of all the malfunctions which occur on the detector. This simply helps to find the causes of malfunctions which frequently occur. If the detector shows a symptom which is not explained in this manual, or still has malfunctions even though remedial actions are taken, please contact RIKEN KEIKI.

<Abnormalities on Unit>

Symptom/Display	FAULT	Causes	Actions
The power cannot be turned on.	—	The wiring is not correct.	Connect the wiring properly.
		The terminal plate is removed.	Connect the terminal plate properly.
		Abnormalities/momentary blackout of power supply system	Provide the rated voltage. Take measures such as checking or adding the UPS, power supply line filter and insulation transformer.
		Cable abnormalities (open circuit/not connected/short circuit)	Check the wiring of detector and related devices around it.
Abnormal operations	—	Disturbances by sudden surge noise, etc.	Turn off and restart the detector. If such a symptom is observed frequently, take appropriate measures to eliminate the noise.
Sensor abnormalities E-1	●	The sensor is not connected or improperly connected.	Check if the cable is securely fastened to the terminal plate.
		Faults of the sensor	Replace the sensor with a new one.
System abnormalities E-9	●	The rated voltage is not supplied to the detector.	Check the power supply, and supply the rated voltage.
		Abnormalities of ROM, RAM, or EEPROM inside of the detector	Please contact RIKEN KEIKI.

<Abnormalities of Readings>

Symptoms	Causes	Actions
The reading rises (drops) and it remains so.	Drifting of sensor output	Perform the zero adjustment and the span adjustment.
	Presence of interference gas	Disturbances by interference gases, such as solvents, cannot be eliminated completely.
	Slow leak	A very small amount of the gas to be detected may be leaking (slow leak). Because ignoring it may cause dangers, take a remedial measure, i.e., taking actions the same as those for the gas alarm.
	Environmental changes	Perform the zero adjustment and the span adjustment.
A gas alarm is triggered despite of no gas leak and no other abnormalities at the detection point.	Presence of interference gas	Disturbances by interference gases, such as solvents, cannot be eliminated completely.
	Disturbance by noise	Turn off and restart the detector. If such a symptom is observed frequently, take appropriate measures to eliminate the noise.
	Sudden change in the environment	When the environment (temperature, etc.) changes suddenly, the detector cannot adjust to it and is affected by it. In some cases, the detector triggers an indication alarm. Because the detector cannot be used under sudden and frequent environmental changes, any preventive actions to eliminate them should be taken by the user.
Slow response	Deteriorated sensor sensitivity	Replace the sensor with a new one.
Span adjustment impossible	Improper calibration gas concentration	Use the proper calibration gas.
	Deteriorated sensor sensitivity	Replace the sensor with a new one.

10

Product Specifications

10-1. List of specifications

<Japanese Specifications>

Detection principle	Semiconductor
Gas to be detected	Combustible/toxic gas
Concentration display	Seven-segment LED (four-digit)
Detection range	Depends on the gas to be detected
Display resolution	Depends on the gas to be detected
Detection method	Diffusion type
Alarm setpoint	Depends on the gas to be detected
Power display	POWER lamp on (green)
External output	Gas concentration signal/alarm contact (gas alarm or fault alarm, gas/fault common alarm)
Alarm accuracy (under the same conditions)	Within ±25% of the alarm setpoint value (combustible gas)/Within 30% of the alarm setpoint value (toxic gas)
Response time (under the same conditions)	Within 30 or 60 seconds after providing the gas 1.6 times the alarm setpoint (depending on the gas to be detected)
Gas alarm type	One-step alarm (H)
Gas alarm display	ALM lamp on (red)
Gas alarm pattern	Auto-reset
Fault alarm/self diagnosis	System abnormalities/sensor abnormalities
Fault alarm display	FAULT lamp on (yellow)/detail display
Fault alarm pattern	Auto-reset
Alarm contact	No-voltage contact 1a, de-energized (energized in response to an alarm) or energized (de-energized in response to an alarm)
Contact capacity	250 VAC - 0.5 A/30 VDC - 0.5 A (resistant load)
Transmission system	3-wire type analog transmission (common cable for power and signal <power, signal, common>)
Transmission specifications	4 - 20 mA DC (linear/load resistance under 300 Ω, resolution divided into 200)
Transmission cable	CVVS1.25 sq - 3-core or CVVS1.25 sq - 5-core (when the contact is used)
Transmission distance	Below 1.25 km
Functions	Alarm delay/suppression
Power supply	24 VDC (17 – 26.4 VDC)
Power consumption	Maximum 3.1 W
Cable connecting port	Pressure proof packing gland
Initial clear	Approx. 25 seconds
Operating temperatures	-20 - 53ºC (at a constant condition)
Operating humidities	Below 95% RH (Non-condensing)
Structure	Wall mounting type
Explosion-proof structure	Flame-proof enclosures
Explosion-proof class	Exd II CT5 (TIIS<Japan>)
External dimensions	Approx. 148 (W) x 161 (H) x 88 (D) mm (projection portions excluded)
Weight	Approx. 2.0 kg
Outer color	Munsell 7.5BG5/2

* Specifications subject to changes without notice.

<Overseas Specifications>

Detection principle	Semiconductor
Gas to be detected	Combustible/toxic gas
Concentration display	Seven-segment LED (four-digit)
Detection range	Depends on the gas to be detected
Display resolution	Depends on the gas to be detected
Detection method	Diffusion type
Alarm setpoint	Depends on the gas to be detected
Power display	POWER lamp on (green)
External output	Gas concentration signal/alarm contact (gas alarm or fault alarm, gas/fault common alarm)
Alarm accuracy (under the same conditions)	Within ±25% of the alarm setpoint value (combustible gas)/Within 30% of the alarm setpoint value (toxic gas)
Response time (under the same conditions)	Within 30 or 60 seconds after providing the gas 1.6 times the alarm setpoint (depending on the gas to be detected)
Gas alarm type	One-step alarm (H)
Gas alarm display	ALM lamp on (red)
Gas alarm pattern	Auto-reset
Fault alarm/self diagnosis	System abnormalities/sensor abnormalities
Fault alarm display	FAULT lamp on (yellow)/detail display
Fault alarm pattern	Auto-reset
Alarm contact	No-voltage contact 1a, de-energized (energized in response to an alarm) or energized (de-energized in response to an alarm)
Contact capacity	250 VAC - 0.5 A/30 VDC - 0.5 A (resistant load)
Transmission system	3-wire type analog transmission (common cable for power and signal <power, signal, common>)
Transmission specifications	4 - 20 mA DC (linear/load resistance under 300 Ω, resolution divided into 200)
Transmission cable	CVVS1.25 sq - 3-core or CVVS1.25 sq - 5-core (when the contact is used)
Transmission distance	Below 1.25 km
Functions	Alarm delay/suppression
Power supply	24 VDC (17 – 26.4 VDC)
Power Consumption	Maximum 3.1 W
Cable connecting port	Pressure proof packing gland
Initial clear	Approx. 25 seconds
Operating temperatures	-20 - 60ºC (at a constant condition)
Operating humidities	Below 95% RH (Non-condensing)
Structure	Wall mounting type
Explosion-proof structure	Flame-proof enclosures
Explosion-proof class	Ⅱ 2GExd Ⅱ CT5Gb(ATEX/IECEx<KEMA>)
External dimensions	Approx. 148 (W) x 161 (H) x 88 (D) mm (projection portions excluded)
Weight	Approx. 2.0 kg
Outer color	Munsell 7.5BG5/2

* Specifications subject to changes without notice.

10-2. List of accessories

- Operating manual .....one
- Dedicated handling lever .....one
- Dedicated control key .....The supplied quantity depends on the number of units to be delivered.

1 to 10 units	one
11 to 20 units	two
21 to 50 units	three
over 51 units	four

10-3. Detection principle

<Semiconductor Type>

Metal dioxide can measure gas concentration based on changes in the electric conductivity of semiconductor caused by gas adsorbed on its surface.

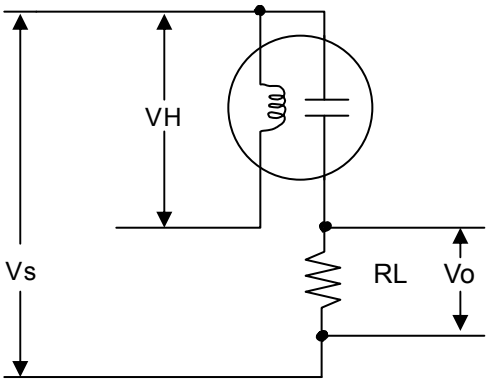

RL: Load resistance, Vo: Output voltage
VH: Heater voltage, Vs: Sensor voltage

11

Definition of Terms

Semiconductor	This is a principle of the sensor installed in the detector. See "10-3. Detection principle" for details.
Initial clear	Output from the detector head fluctuates for a while after turning on the power. This is a function to prevent triggering alarm during that time.
Full scale	Maximum value of the detection range.
%LEL	A unit which the lower explosive limit (LEL) of the combustible gas to be detected is set to 100.
ppm	A concentration unit that means part per million of the combustible gas to be detected.
Calibration	Adjusts the readings to the calibration gas concentration value by using the calibration gas.
Zero suppression	A function to cut off the specific drifting that the sensor has.
Alarm delay time	A function which temporarily suspends activation to prevent a false alarm caused by noise from its outside.
INHIBIT	The gas detection function is temporarily suspended during maintenance, etc. of the detector. This is also called "point skip", which has the same function.