PT1E-1050

SCAN ME

@maximal-safety

Indicator/Alarm Unit

RM-5000 Series

Operating Manual

Request for the Customers

- Read and understand this operating manual before using the indicator/alarm unit.
- Use the indicator/alarm unit in accordance with the operating manual.
- Regardless of warranty period, we shall not make any indemnification for accidents and damage caused by using this product.
  Make sure to read the warranty policy specified on the warranty.
- Because this is a safety unit, a regular maintenance for every six months and daily maintenance must be performed.
- If any abnormality is found in the indicator/alarm unit, notify it to RIKEN KEIKI immediately. (Visit our Web site to find your nearest RIKEN KEIKI office.)

RIKEN KEIKI Co., Ltd.

2-7-6 Azusawa, Itabashi-ku, Tokyo, 174-8744, Japan

Phone : +81-3-3966-1113

Fax : +81-3-3558-9110

E-mail : intdept@rikenkeiki.co.jp

Web site : http://www.rikenkeiki.co.jp/english/

<Contents>

1 Outline of the Product 3
1-1. Preface 3
1-2. Purpose of use 3
1-3. Definition of DANGER, WARNING, CAUTION, and NOTE 4

2 Important Notices on Safety 5
2-1. Danger cases 5
2-2. Warning cases 6
2-3. Precautions 7

3 Product Components 8
3-1. Main unit and accessories 8
3-2. Outline drawing 9
3-3. Names and functions for each part 10
3-3. Block diagram 14

4 How to Use 15
4-1. Before using the indicator/alarm unit 15
4-2. Precautions for installation points 15
4-3. Precautions for system designing 16
4-4. How to install 19
4-5. How to wire 21

5 How to Operate 31
5-1. Preparation for start-up 31
5-2. Basic operating procedures 32
5-3. How to start the indicator/alarm unit 33
5-4. Modes 34
5-5. Detection mode 36
5-6. Alarm test mode 37
5-7. User mode 38
5-8. How to exit 42

6 Operations and Functions 43
6-1. Gas alarm activation 43
6-2. Fault alarm activation 47
6-3. External output operation 48
6-4. Other functions 50

7 Maintenance 52
7-1. Maintenance intervals and items 52
7-2. Regular maintenance mode 54
7-3. Gas calibration method 69
7-4. How to clean 72
7-5. How to replace the fuse 72

8 Storage, Relocation and Disposal 73
8-1. Procedures to store the indicator/alarm unit or leave it for a long time 73
8-2. Procedures to relocate the indicator/alarm unit or use it again 73
8-3. Disposal of products 73

9 Troubleshooting 74

10 Product Specifications 77
10-1. List of specifications 77
10-2. Product components 79

11 Definition of Terms 80

1

Outline of the Product

1-1. Preface

Thank you for choosing our indicator/alarm unit RM-5000 series for use with the gas detection and alarm system. Please check that the model number of the product you purchased is included in the specifications on this manual.

This manual explains how to use the indicator/alarm unit and its specifications. It contains information required for using the indicator/alarm unit properly. Not only the first-time users but also the users who have already used the product must read and understand the operating manual to enhance the knowledge and experience before using the indicator/alarm unit.

1-2. Purpose of use

- Use the indicator/alarm unit RM-5000 series in combination with a gas detector head on a one-on-one basis.

GP-5001:	Combustible gas indicator/alarm unit to be used in combination with a catalytic combustion type detector head
NC-5001:	Combustible gas indicator/alarm unit to be used in combination with a new ceramic type detector head
NC-5001W:	Combustible gas indicator/alarm unit with double range specifications to be used in combination with a new ceramic type detector head
NP-5001:	Combustible gas indicator/alarm unit to be used in combination with a thermal conductivity type detector head
SP-5001:	Combustible gas or toxic gas indicator/alarm unit to be used in combination with a hot-wire semiconductor type detector head
GH-5001:	Combustible gas or toxic gas indicator/alarm unit to be used in combination with a semiconductor type detector head
EC-5002:	Toxic gas indicator/alarm unit to be used in combination with an electrochemical type detector head
OX-5001:	Oxygen indicator/alarm unit to be used in combination with a detector head that uses an oxygen sensor
OX-5002:	Oxygen indicator/alarm unit to be used in combination with a detector head that uses an oxygen sensor
RM-5002:	Indicator/alarm unit to be used in combination with a gas detector head that outputs general measurement signals
RM-5003:	Gas indicator/alarm unit to be used in combination with a gas detector head with 3-wire type 4 - 20 mA output specifications

- The gas detection and alarm system is a safety unit, not an analyzer or densitometer which performs quantitative/qualitative analysis/measurement for gases. You must understand the features of the indicator/alarm unit before using it, so that you can use it properly.
- The indicator/alarm unit displays a gas concentration on the character LCD (digital and bar meter display <three colors of green, yellow, and red>) according to a signal from the detector head. Gas concentrations are displayed in different colors according to danger levels, i.e., in green if neither of the alarm setpoints is exceeded, in orange if the first alarm setpoint is exceeded, and in red if the second alarm setpoint is exceeded.
- The indicator/alarm unit has two-step gas alarm contact and fault alarm contact.
- The indicator/alarm unit outputs gas concentration in 4 - 20 mA or digital data (RS-485: option).

1-3. Definition of DANGER, WARNING, CAUTION, and NOTE

DANGER	This message indicates that improper handling may cause serious damage on life, health or assets.
WARNING	This message indicates that improper handling may cause serious damage on health or assets.
CAUTION	This message indicates that improper handling may cause minor damage on health or assets.
NOTE	This message indicates advice on handling.

2

Important Notices on Safety

2-1. Danger cases

DANGER

This is not an explosion-proof unit.

2-2. Warning cases

WARNING

Specified devices
Connect the indicator/alarm unit only to the specified devices. If it is connected to any unspecified device, the indicator/alarm unit or the connected device may be damaged.

Power supply
Before turning on the indicator/alarm unit, always check that the voltage is properly applied. Do not use an unstable power supply because it may cause malfunctions.

Need of grounding circuit
Do not cut the grounding circuit or disconnect the wire from the grounding terminal.

Defects in protective functions
Before starting the indicator/alarm unit, check the protective functions for defects. When seeming defects are found in the protective functions, such as protective grounding, do not start the indicator/alarm unit.

External connection
Before connecting the indicator/alarm unit to the external device, securely connect it to a protective grounding circuit.

Operation in a gas
Do not operate the indicator/alarm unit in a place where combustible gases or vapors are present. Operating the indicator/alarm unit in such an environment will lead to extreme dangers.

Response to gas alarm
Issuance of a gas alarm indicates that there are extreme dangers. Take proper actions based on your judgment.

2-3. Precautions

CAUTION

Do not use a transceiver near the indicator/alarm unit.
Radio wave from a transceiver, etc. near the indicator/alarm unit or its cables may disturb indication reading. If a transceiver or other radio wave transmitting device is used, it must be used in a place where it disturbs nothing.

To restart the indicator/alarm unit, wait for five seconds or more before doing it.
Restarting the indicator/alarm unit in less than five seconds may cause errors.

Do not use the external output of the indicator/alarm unit to control other units.
This is not a control unit. It is not allowed to use the external output of the indicator/alarm unit to control other units.

Do not disassemble/modify the indicator/alarm unit, or change the settings if not necessary.
Disassembling/modifying the indicator/alarm unit will invalidate the warranty of the performance. Changing the settings without understanding the specifications may cause alarm malfunctions. Please use the indicator/alarm unit properly in accordance with the operating manual.

Never fail to perform a regular maintenance.
Since this is a safety unit, a regular maintenance on it and the detector head must be performed to ensure safety.

3

Product Components

3-1. Main unit and accessories

<Main Unit (RM-5000 Series)>
EC-5002, OX-5002, RM-5002, RM-5003

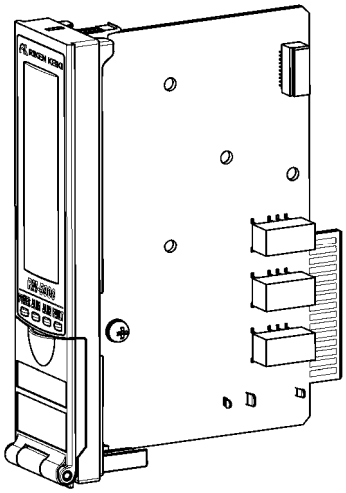

GP-5001, NC-5001, NC-5001W, NP-5001
SP-5001, GH-5001, OX-5001

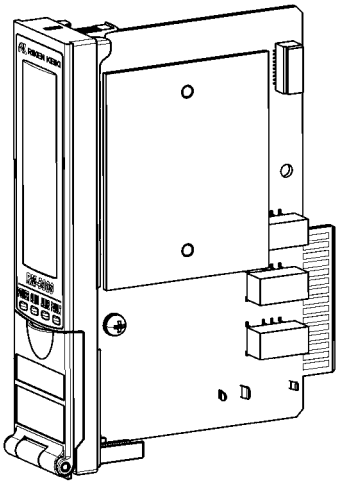

<Accessories>

- Operating manual
  One copy per system regardless of the number of units to be delivered

3-2. Outline drawing

NOTE

Install the indicator/alarm unit in a single-unit case (option) or multi-unit case (option) before using it.
This section explains the unit in a single-unit case.
For information on using a multi-unit case, see the operating manual of the multi-unit case.

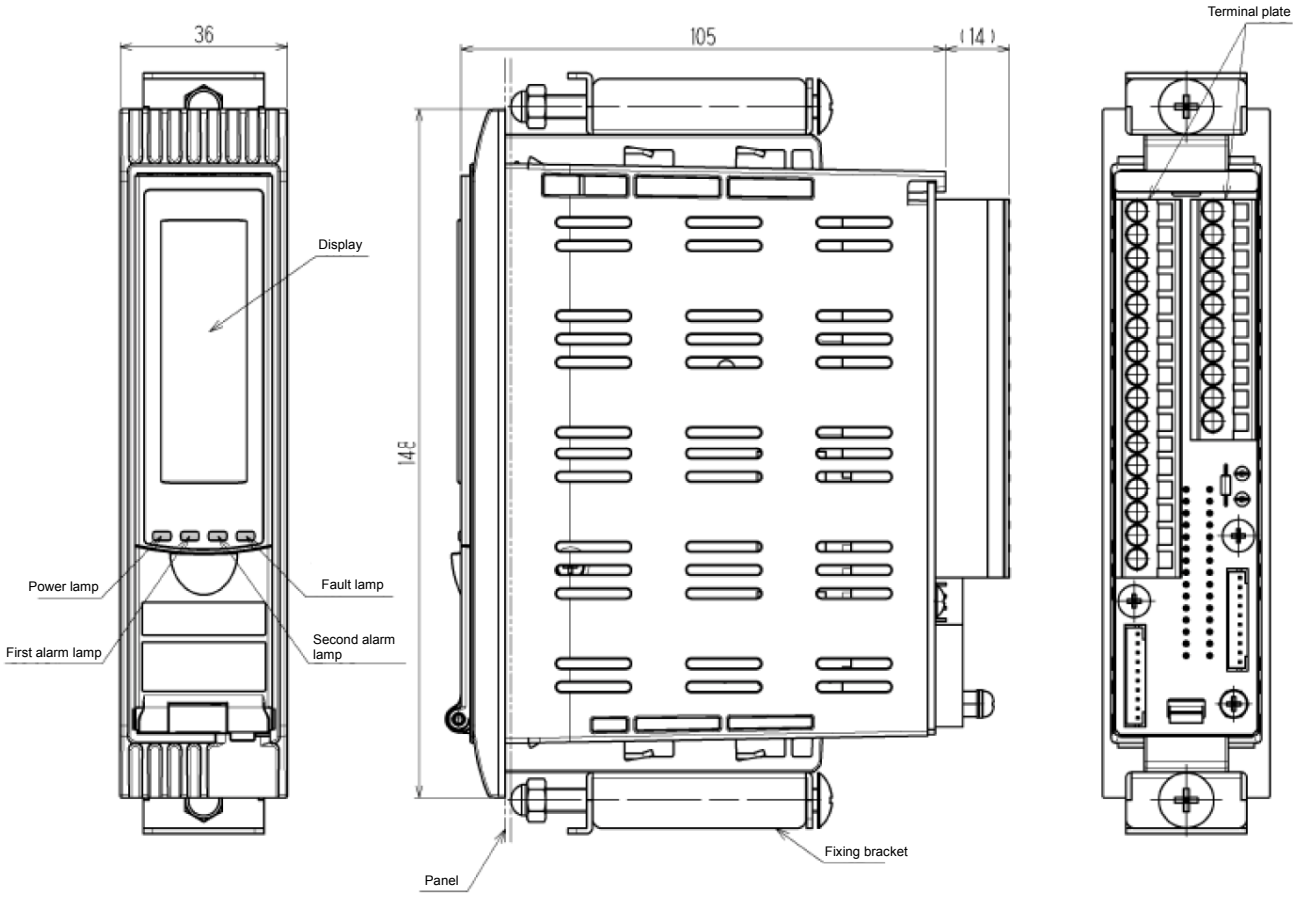

3-3. Names and functions for each part

<Front Panel and Character LCD>

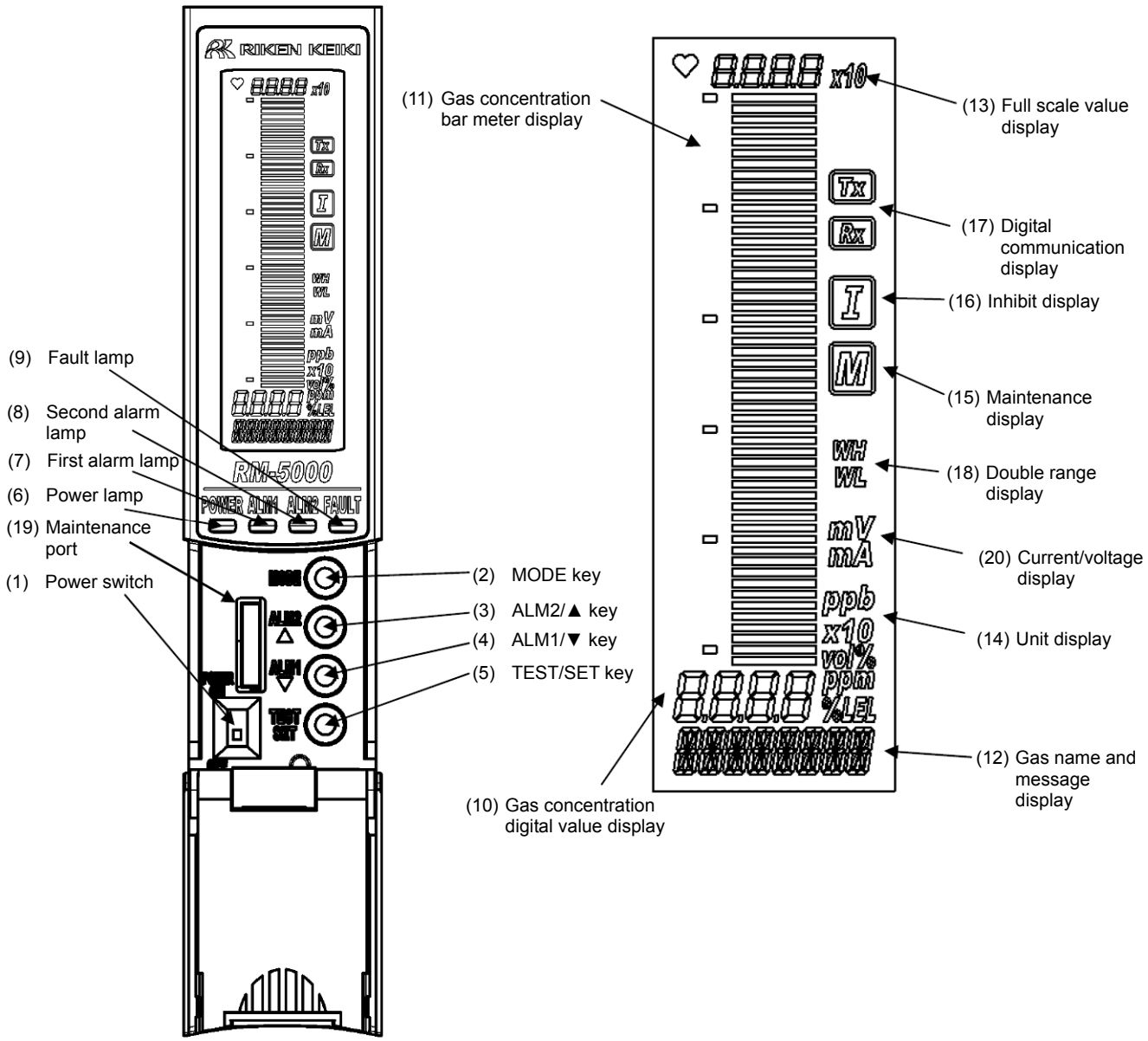

Number in the figure	Item	Function
(1)	POWER switch	Power switch.
(2)	MODE key	Used to enter the maintenance mode. It is also used to cancel or skip in a specific mode.
(3)	ALM2/▲ key	Used to switch screen or change a value (UP). Also used to display the second alarm (ALM2) setpoint.
(4)	ALM1/▼ key	Used to switch screen or change a value (DOWN). Also used to display the first alarm (ALM1) setpoint.
(5)	TEST/SET key	Used to enter the test mode. It is used for value confirmation and so on in a specific mode.
(6)	Power lamp (POWER)	Power lamp. It lights up in green when the power is on.
(7)	First alarm lamp (ALM1)	First alarm lamp. It blinks or lights up in red when the first alarm is reached.
(8)	Second alarm lamp (ALM2)	Second alarm lamp. It blinks or lights up in red when the second alarm is reached.
(9)	Fault lamp (FAULT)	Fault lamp. It lights up in yellow when an abnormality is detected in the indicator/alarm unit.
(10)	Gas concentration digital value display	Displays the gas concentration and so on.
(11)	Gas concentration bar meter display	The detectable range (full scale = FS) is divided into 50 with bars. The increase in concentration is displayed in proportion to the full scale.
(12)	Gas name display	Displays gas name in chemical formula, etc. (e.g. CH4 for methane)
(13)	Full scale value display	Displays the full scale value of a detected gas.
(14)	Gas concentration unit display	Displays the unit according to the specification (ppm, ppb, vol%, %, %LEL).
(15)	Maintenance display	Displayed during the maintenance mode. When this indicator is displayed, the alarm contact is disabled.
(16)	Inhibit display	Displayed when the inhibition (point skip) is set.
(17)	Digital communication display (*1)	For RS-485 communications, this indicator is displayed (TX, RX) while transmitting data with the upper unit.
(18)	Double range display (*2)	Displayed for the double range specifications (WH: High range, WL: Low range).
(19)	Maintenance port	Used by a service engineer during maintenance. This is not typically used by the user.
(20)	Current/voltage display	Displayed during the environmental setting (adjustment and setting operations) for the sensor in maintenance mode.

*1: Displayed only on a model with RS-485 (option) mounted.
*2: Displayed only on NC-5001W.

<List of Display Symbols>

Gas concentration digital display (seven-segment)

Numbers

0	1	2	3	4	5	6	7	8	9

Alphabet (upper-case)

A	B	C	D	E	F	G	H	I	J	K	L	M

N	O	P	Q	R	S	T	U	V	W	X	Y	Z

Alphabet (lower-case)

a	b	c	d	e	f	g	h	i	j	k	l	m

n	o	p	q	r	s	t	u	v	w	x	y	z

Symbols

-	^	~

Gas name and message display (14-segment)

Numbers

0	1	2	3	4	5	6	7	8	9

Alphabet (upper-case)

A	B	C	D	E	F	G	H	I	J	K	L	M

N	O	P	Q	R	S	T	U	V	W	X	Y	Z

Symbols

@	+	-	/	~

<Attaching or Detaching Battery Unit>

Attach or detach the indicator/alarm unit from the single-unit case or multi-unit case according to the following procedure.

(1) Attaching procedure
- Open the front cover of the indicator/alarm unit.
- Make sure that the power switch of the indicator/alarm unit is OFF.
- Insert the indicator/alarm unit along the rail into the single-unit case or multi-unit case.
- Push it in until an click is heard and you feel that it is locked in.
- Gently pull it to make sure that the indicator/alarm unit does not come off.
- Close the front cover of the indicator/alarm unit.

(2) Detaching procedure
- Open the front cover of the indicator/alarm unit.
- Make sure that the power switch of the indicator/alarm unit is OFF.
- While pressing the lock lever on the lower right of the indicator/alarm unit, hold the front cover and pull it out of the case.
- Close the front cover of the indicator/alarm unit.

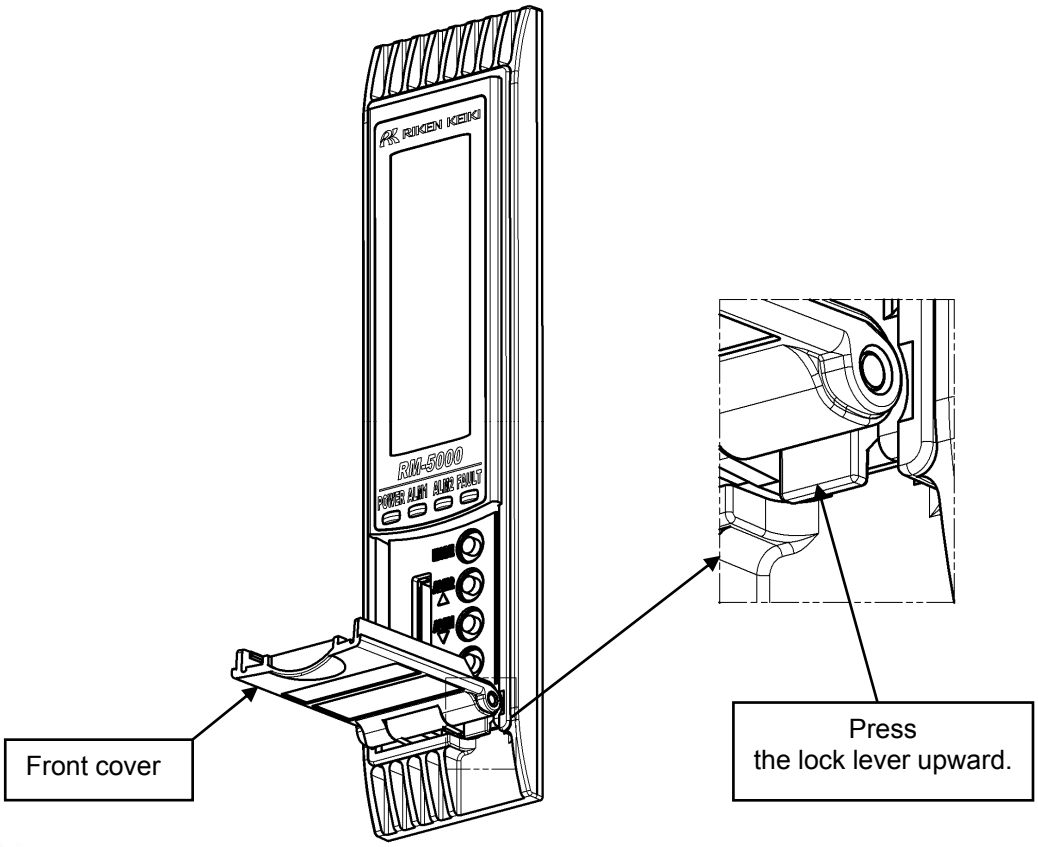

CAUTION

Turn off the power of the indicator/alarm unit before attaching or detaching it. Otherwise, a failure may be caused.

CAUTION

This is a precision device. Be careful not to drop it when detaching it. Dropping the unit compromises its original performance or causes malfunctions.

3-3. Block diagram

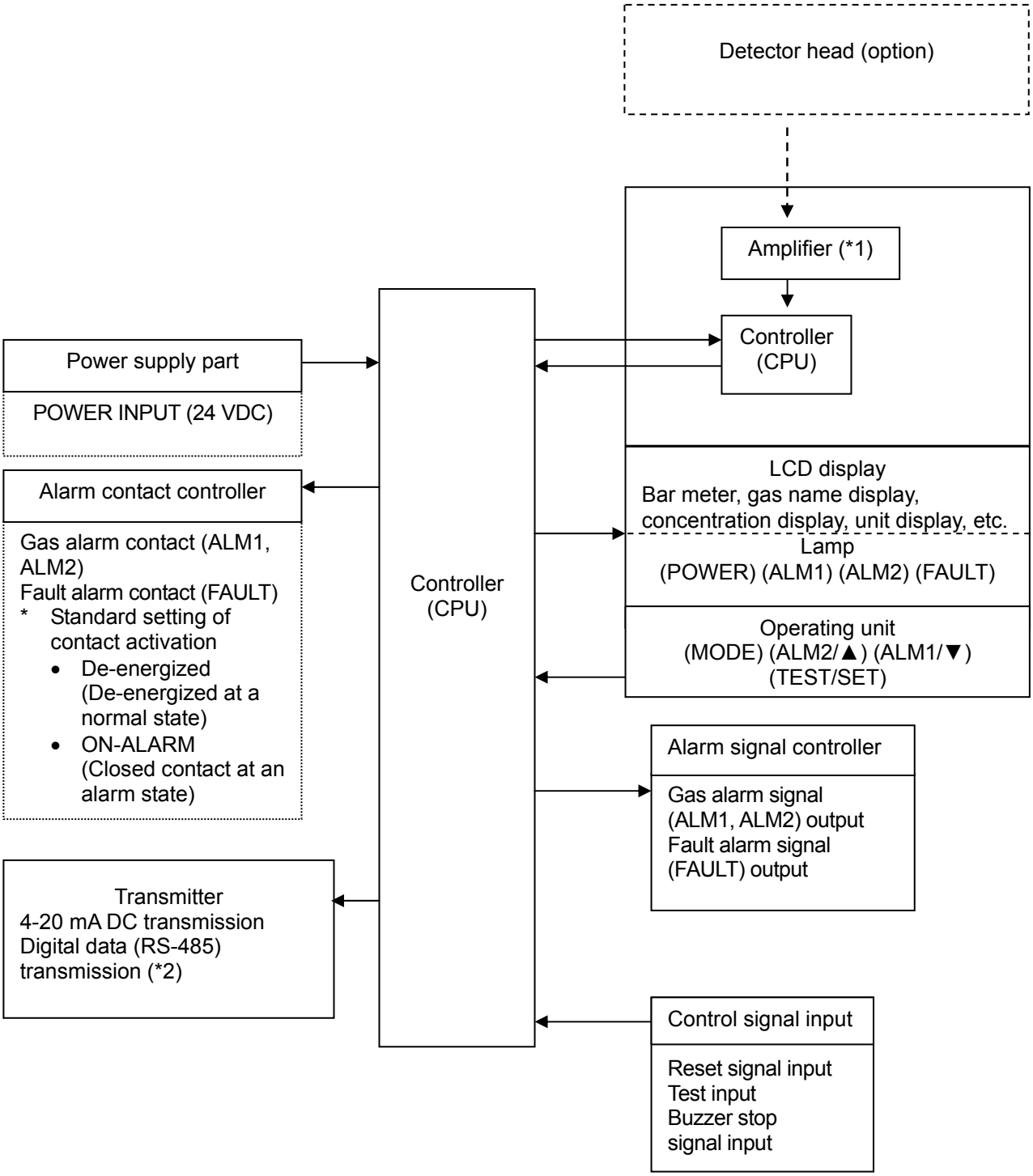

*1: Installed only in GP-5001, NC-5001, NC-5001W, NP-5001, SP-5001, GH-5001, OX-5001.
*2: Only on a model with RS-485 (option) mounted.

4

How to Use

4-1. Before using the indicator/alarm unit

Not only the first-time users but also the users who have already used the product must follow the operating precautions.
Ignoring the precautions may damage the indicator/alarm unit, resulting in inaccurate gas detection.

NOTE

Install the indicator/alarm unit in a single-unit case (option) or multi-unit case (option) before using it.
This section explains using the single-unit case.
For information on using the multi-unit case, see the operating manual of the multi-unit case.

4-2. Precautions for installation points

CAUTION

This is a precision device. Because the indicator/alarm unit may not provide the specified performance in some places (environments), check the environment in the installation point, and then take appropriate actions if necessary.
Because the indicator/alarm unit plays an important role for safety and disaster prevention, you must install as many units of the indicator/alarm unit as needed in appropriate points.
Because points where gases leak and remain easily are different depending on the types of gases and the working areas, please decide carefully installation sites and the number of units to be installed.

Do not install the indicator/alarm unit in a place with vibrations or shocks.
The indicator/alarm unit consists of sensitive electronic parts. The indicator/alarm unit must be installed in a stable place without vibrations or shocks and it cannot drop.

Do not install the indicator/alarm unit in a place exposed to water, oil or chemicals.
When selecting installation points, avoid a place where the indicator/alarm unit is exposed to water, oil or chemicals.

Do not install the indicator/alarm unit in a place where the temperature drops below -10ºC or rises over 40ºC.
The operating temperature of the indicator/alarm unit is -10 to 40ºC. The indicator/alarm unit must be installed in a stable place where the operating temperature is maintained and does not change suddenly.

Do not install the indicator/alarm unit in a place exposed to direct sunlight or sudden changes in the temperature.
When you select installation sites, avoid a place where it is exposed to direct sunlight or radiant heat (infrared rays emitted from a high-temperature object), and where the temperature changes suddenly. Condensation may be formed inside the indicator/alarm unit, or the indicator/alarm unit cannot adjust to sudden changes in the temperature.

Keep the indicator/alarm unit (and its cables) away from noise source devices.
When selecting installation points, avoid a place where high-frequency/high-voltage devices exist.

Do not install the indicator/alarm unit in a place where maintenance of the indicator/alarm unit cannot be performed or where handling the indicator/alarm unit involves dangers.
Regular maintenance of the indicator/alarm unit must be performed.
Do not install the indicator/alarm unit in a place where the machinery must be stopped when maintenance is performed in its inside, where parts of the machinery must be removed to perform maintenance, or where the indicator/alarm unit cannot be removed because tubes or racks prevent access to it. Do not install the indicator/alarm unit in a place where maintenance involves dangers, for example, near a high-voltage cable.

Do not install the indicator/alarm unit in machinery which is not properly grounded.
Before installing the indicator/alarm unit in machinery, the machinery must be grounded properly.

Do not install the indicator/alarm unit in a place where other gases exist around it.
The indicator/alarm unit must not be installed in a place where other gases exist around it.

4-3. Precautions for system designing

CAUTION

An unstable power supply and noise may cause malfunctions or false alarms.
The descriptions in this section must be reflected on the designing of a system using the indicator/alarm unit.

Using a stable power supply
The external output and alarm contact of the indicator/alarm unit may be activated when the power is turned on, when momentary blackout occurs, or when the system is being stabilized. In such cases, use a safety power supply, or take appropriate actions on the receiving side.
The indicator/alarm unit must be provided with the following power supply.

Power supply voltage	24 VDC (21.6 – 26.4 VDC) (Terminal voltage of the indicator/alarm unit)	
Allowed time of momentary blackout	Up to 10 milliseconds (To recover from the momentary blackout for 10 milliseconds or more, restart the indicator/alarm unit.)	Example of actions To ensure continuous operation and activation, install a protective power supply outside the indicator/alarm unit.
Others	Do not use it with a power supply of large power load or high-frequency noise.	Example of actions Use a line filter to avoid the noise source if necessary.

Heat radiation designing
When it is installed in the closed instrumentation panel, attach ventilation fans above and below the panel.

Introducing protective measures against lightning
If cables are installed outside the factory/plant, or if internal cables are installed in the same duct as the cables coming from outside the factory/plant, "lightning" will cause problems. Because lightning acts as a large emission source while cables act as a receiving antenna, devices connected to the cables may be damaged.

Lightning cannot be prevented. Cables installed in a metal conduit or under the ground cannot be completely protected from inductive lightning surge caused by lightning. Although complete elimination of disasters caused by lightning is impossible, the following protective measures can be taken.

Protection against lightning	Take appropriate measures in accordance with the importance of the facilities and the environment. • Connect the transmission signal route by using optical fiber. • Provide protection by a lightning arrester (cable arrester). (Although inductive lightning surge can be transmitted through the cable, it is prevented by installing a lightning arrester before the field devices and central processing equipment. For information on how to use a lightning arrester, please contact the manufacturer.)
Grounding	In addition to lightning, there are more sources of surge noise. To protect units from these noise sources, the units must be grounded.

* The lightning arrester has a circuit to remove a surge voltage which damages field devices, so that signals may be attenuated by installing the arrester. Before installing a lightning arrester, verify that it works properly.

Proper use of alarm contact

The alarm contact of the indicator/alarm unit is used to transmit signals to activate an external buzzer or alarm lamp. Do not use the indicator/alarm unit for controlling purpose (e.g., controlling the shutdown valve).

CAUTION

The "b" contact (break contact) under de-energized state may be opened momentarily by a physical shock, such as external force.
When the "b" contact is selected for the alarm contact, take appropriate actions to prepare for a momentary activation, for example, add signal delay operation (approximately one second) to the receiving side of the "b" contact.

The specifications for the alarm contact of the indicator/alarm unit are based on the resistant load conditions. If inductive load is used at the alarm contact, the following errors will occur easily because counter electromotive force is generated at the contact.

- Deposition, defective insulation or defective contact at the relay contact
- Damage of any electric parts due to high-voltage generated inside the indicator/alarm unit
- Abnormal operations by an out-of-control CPU

CAUTION

- In principle, do not activate inductive load at the alarm contact of the indicator/alarm unit. (In particular, never use the inductive load to activate a fluorescent lamp or motor.)
- If inductive load is activated, relay it with an external relay (contact amplification). However, because the coil of an external relay also involves inductive load, select a relay at a lower voltage (100 VAC or below), and then protect the contact of the indicator/alarm unit with an appropriate surge absorbing part, such as a CR circuit.

If load is to be activated, appropriate measures must be taken to stabilize the operation of the indicator/alarm unit and protect the alarm contact referring to the following information.

- Relay it with an external relay at a lower voltage of 100 VAC or below (contact amplification). At the same time, the surge absorbing part SK1 suitable for the specifications must be attached to the external relay.
- In addition, the surge absorbing part SK2 must be attached to the loaded side of the external relay if necessary.
- It may be recommended that the surge absorbing part should be attached to the contact for certain load conditions. It must be attached to an appropriate position by checking how the load is activated.

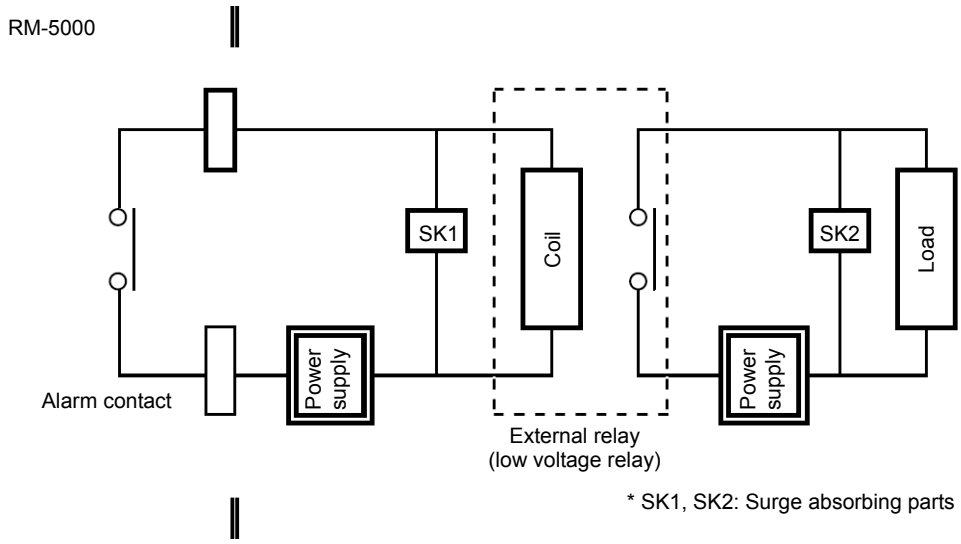

4-4. How to install

NOTE

Install the indicator/alarm unit in a single-unit case (option) or multi-unit case (option) before using it.
This section explains using the single-unit case.
For information on using the multi-unit case, see the operating manual of the multi-unit case.

<Panel Cutout Dimensions>

When installed in two rows vertically

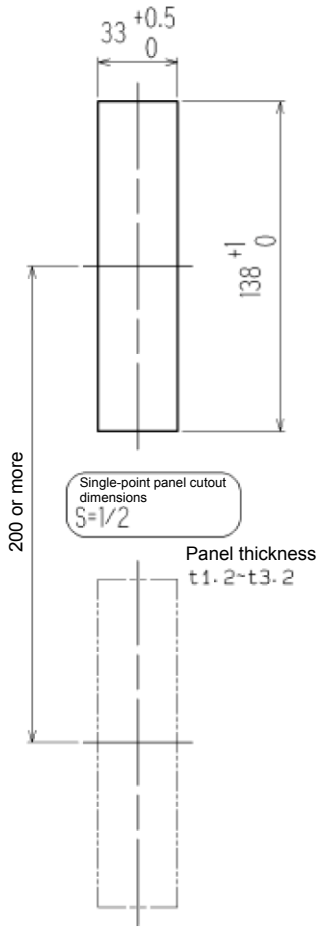

When installed in one row vertically and N columns horizontally

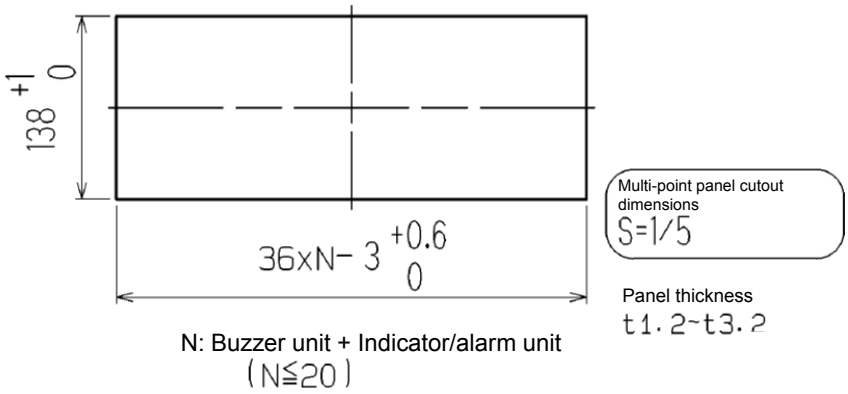

<Attaching procedure>

After drilling holes in the panel to install a single-unit case, attach the indicator/alarm unit according to the following procedure.

(1) Insert the single-unit case from the rear terminal plate side to the panel front side.
(2) Set fixing bracket on the upper and lower parts of the single-unit case.
(3) Tighten the screws of the fixing bracket.

CAUTION

- Tightening the screws to a high torque may deform the case or damage the fixing bracket.
- Turn off the power of the indicator/alarm unit before attaching or detaching it. Otherwise, a failure may be caused.

4-5. How to wire

CAUTION

- Use the specified cables for each of the connections between the indicator/alarm unit and the detector head.
- When wiring, be careful not to apply stresses on the terminal plate when (overweight) cables are installed.
- The power cables and signal cables must not be installed together with the motor power cables, etc.
- When stranded wires are used, prevent wires from contacting each other.
- Use the specified tools to wire.

<Recommended Cables>

Model	Cable specifications
GP-5001 NC-5001 NC-5001W SP-5001	Power supply: Equivalent to CVV (1.25 sq or 2.0 sq) - 2-core Detector head: Equivalent to CVV (1.25 sq or 2.0 sq) - 4-core or 6-core Signal: Equivalent to CVVS (1.25 sq or 2.0 sq) - 2-core Contact: Equivalent to CVV (1.25 sq or 2.0 sq) - max. 6-core
NP-5001	Power supply: Equivalent to CVV (1.25 sq or 2.0 sq) - 2-core Detector head: Equivalent to CVVS (1.25 sq or 2.0 sq) - 4-core or 6-core Signal: Equivalent to CVVS (1.25 sq or 2.0 sq) - 2-core Contact: Equivalent to CVV (1.25 sq or 2.0 sq) - max. 6-core
OX-5001 OX-5002 RM-5002	Power supply: Equivalent to CVV (1.25 sq or 2.0 sq) - 2-core Detector head: Equivalent to CVVS (1.25 sq or 2.0 sq) - 2-core Signal: Equivalent to CVVS (1.25 sq or 2.0 sq) - 2-core Contact: Equivalent to CVV (1.25 sq or 2.0 sq) - max. 6-core
GH-5001	Power supply: Equivalent to CVV (1.25 sq or 2.0 sq) - 2-core Detector head: Equivalent to CVVS (1.25 sq or 2.0 sq) - 3-core or 5-core Signal: Equivalent to CVVS (1.25 sq or 2.0 sq) - 2-core Contact: Equivalent to CVV (1.25 sq or 2.0 sq) - max. 6-core
EC-5002	Power supply: Equivalent to CVV (1.25 sq or 2.0 sq) - 2-core Detector head: Equivalent to CVVS (1.25 sq or 2.0 sq) - 2-core or 4-core Signal: Equivalent to CVVS (1.25 sq or 2.0 sq) - 2-core Contact: Equivalent to CVV (1.25 sq or 2.0 sq) - max. 6-core
RM-5003	Power supply: Equivalent to CVV (1.25 sq or 2.0 sq) - 2-core Detector head: Equivalent to CVVS (1.25 sq or 2.0 sq) - 3-core Signal: Equivalent to CVVS (1.25 sq or 2.0 sq) - 2-core Contact: Equivalent to CVV (1.25 sq or 2.0 sq) - max. 6-core

<Figure of Terminal Plate>

NOTE

Install the indicator/alarm unit in a single-unit case (option) or multi-unit case (option) before using it.
This section explains using the single-unit case.
For information on using the multi-unit case, see the operating manual of the multi-unit case.

11	DET3	Detector head
12	DET4	
13	DET5	
14	DET6	
15	Reset signal input (*3)	
16	Test input (*3)	
17	Buzzer stop Signal input (*3)	
18	Common (*3)	
19	First alarm signal output (*1, *3)	
20	Second alarm signal output (*1, *3)	
21	Fault alarm signal output (*1, *3)	
22	Buzzer signal output (*1, *3)	
23	+	4 - 20 mA output
24	−	
25	A	RS-485 input-output (*2, *3)
26	B	

1	+	Power input 24 VDC
2	+	
3	−	
4	−	
5		First alarm contact output
6		
7		Second alarm contact output
8		
9		Fault alarm contact output
10		

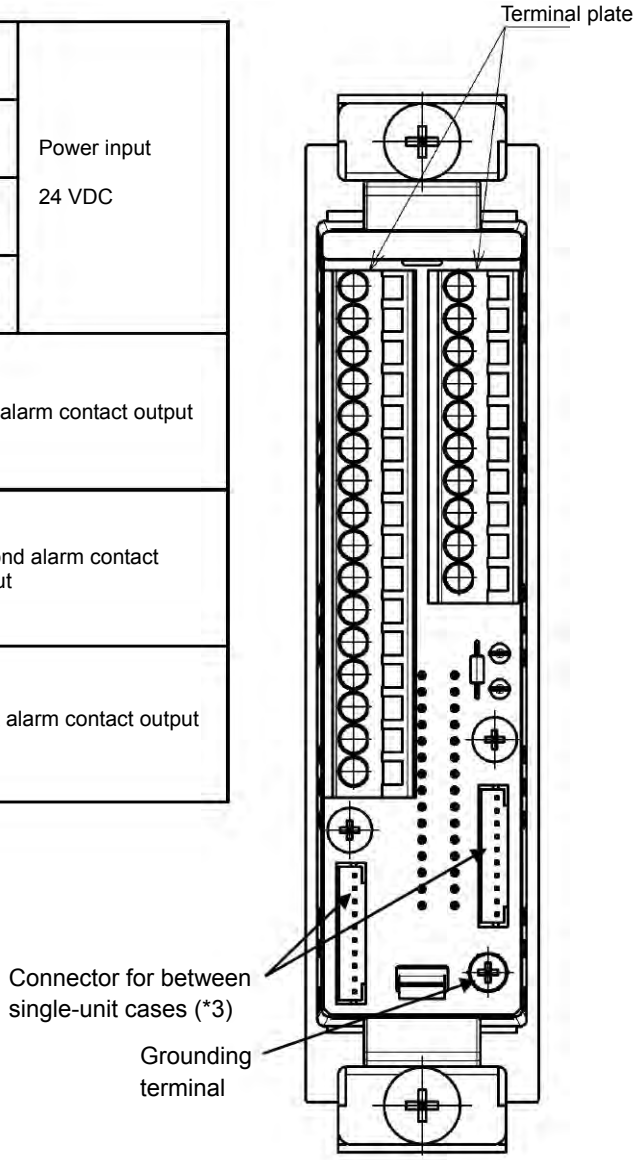

*1: A signal to be used between the indicator/alarm unit and the buzzer unit TAN-5000 (option). This is not used by the user.
*2: Output only if RS-485 (option) is mounted.
*3: Used for transition wiring for signals between devices when single-unit cases (option) are connected. When this connector is used, no transition wiring between cases is required at the terminal plate.

<Specifications of Terminal Plate>

Specifications of terminal plate

- Rated voltage: 250 VAC
- Rated current: 12 A

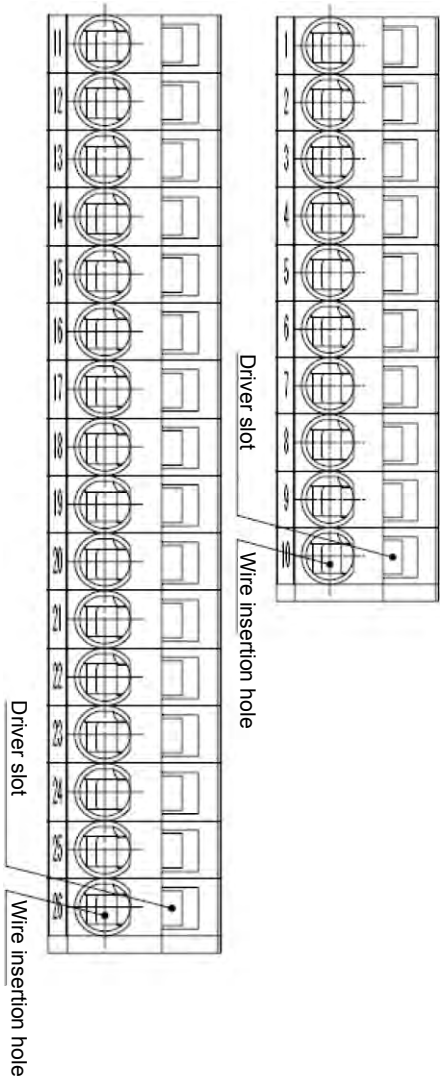

Connection conditions
- Cable: 0.08 - 2.5 mm^2
- Bare wire length: 8 - 9 mm
- Connecting tools: Dedicated screwdrivers manufactured by WAGO and equivalent (edge width 3.5 x 0.5 mm or less)

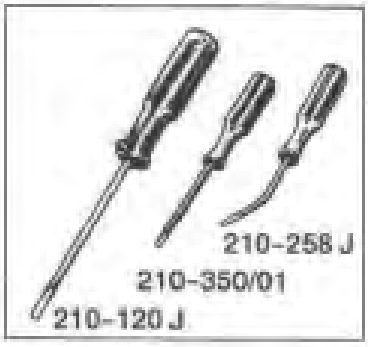

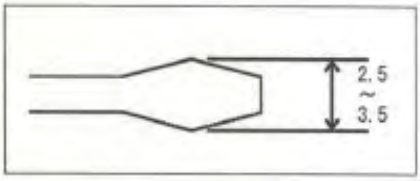

● Dedicated products
210-120J: ..... Standard model
210-350/01: .. Short model
210-258J: ..... Angle model

- When using a general-purpose screwdriver, use one with an edge width from 2.5 mm to 3.5 mm. Do not use a screwdriver that does not fit into the screwdriver slot or cannot open the spring properly.

CAUTION

The specified bare wire length must be observed when the wire insulation is peeled off.
Improper clamping of the wire due to a shorter bare wire length may cause defective electric conduction or heating.
Catching the wire insulation due to a shorter bare wire length may cause defective electric conduction or heating.
Exposing the wire due to a longer bare wire length may cause defective insulation or a short circuit.
Be careful not to break up the wire. If the wire is broken up when inserted to the terminal, this may cause defective insulation or heating.

Compatible bar terminal
For a bar terminal, the following items are available.
- Bar terminal (ferrule): Model 216 Series (manufactured by WAGO)
- Crimping tool: Model VarioCrimp 4 (206-204) (manufactured by WAGO)

CAUTION

A bar terminal of the specified model must be used. Using other bar terminals invalidates the warranty of the performance.

<How to Connect to Terminal Plate>

When cables are connected to the terminal plate, use the dedicated screwdriver or a compatible flathead screwdriver to do so as shown below.

CAUTION

The right tools must be used. Only one wire can be connected to one wiring hole.
When the wire is inserted into the driver slot by mistake, it does not contact the conductive part. This may cause defective electric conduction or heating.
When the wire is inserted under the spring by mistake, it does not contact the conductive part. This may cause defective electric conduction or heating.

■ Wiring: Perform wiring as shown in the figure below.

(1) Insert the screwdriver at an angle into the operating slot (square hole).

(2) While standing the screwdriver upright, insert it all the way securely.

(3) If you have done the previous steps properly, the screwdriver is kept upright when you let it go.

(4) Properly peel off a wire and insert it into the wiring hole (round hole).
The wire will go in smoothly if you insert the wire along the edge of the round hole.

(5) When the wire is inserted as far as it will go, pull out the screwdriver while holding the wire.

(6) To check whether the wire is connected securely, pull the wire gently.
(Do not pull the wire strongly.)

■ Removal: In the same way as for the wiring procedure, insert the screwdriver to remove the wire.

<Grounding>

Connect the indicator/alarm unit to your grounding terminal.

WARNING

Before turning on the indicator/alarm unit, never fail to connect it to a grounding terminal.
For stable operation of the indicator/alarm unit and safety, it must be connected to a grounding terminal. Do not connect the grounding wire to a gas pipe. The grounding must be made as D type grounding (below 100 Ω of grounding resistance).

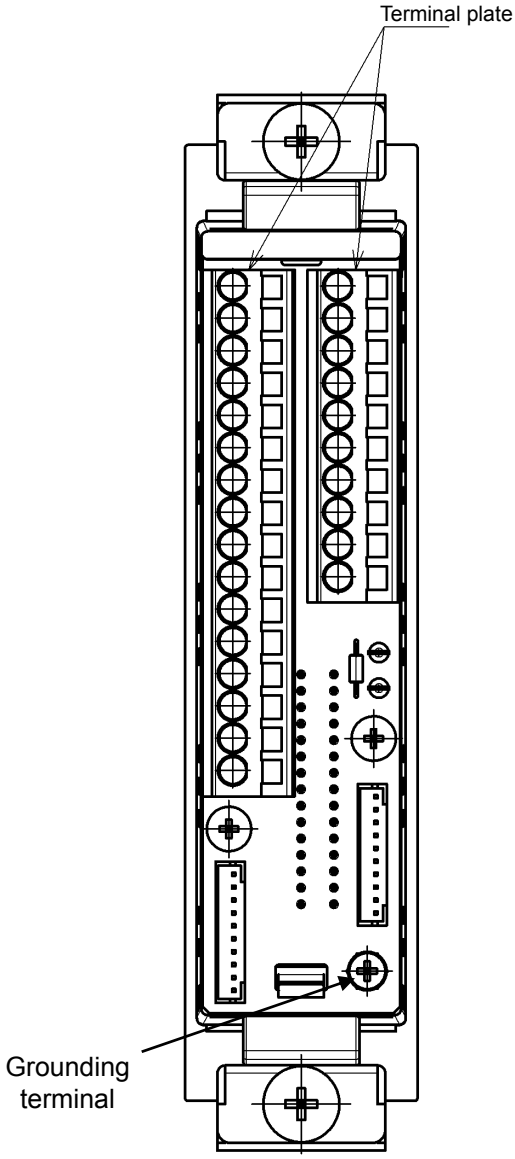

<Connecting to the Gas Detector Head>

GP-5001, NC-5001, NC-5001W, SP-5001

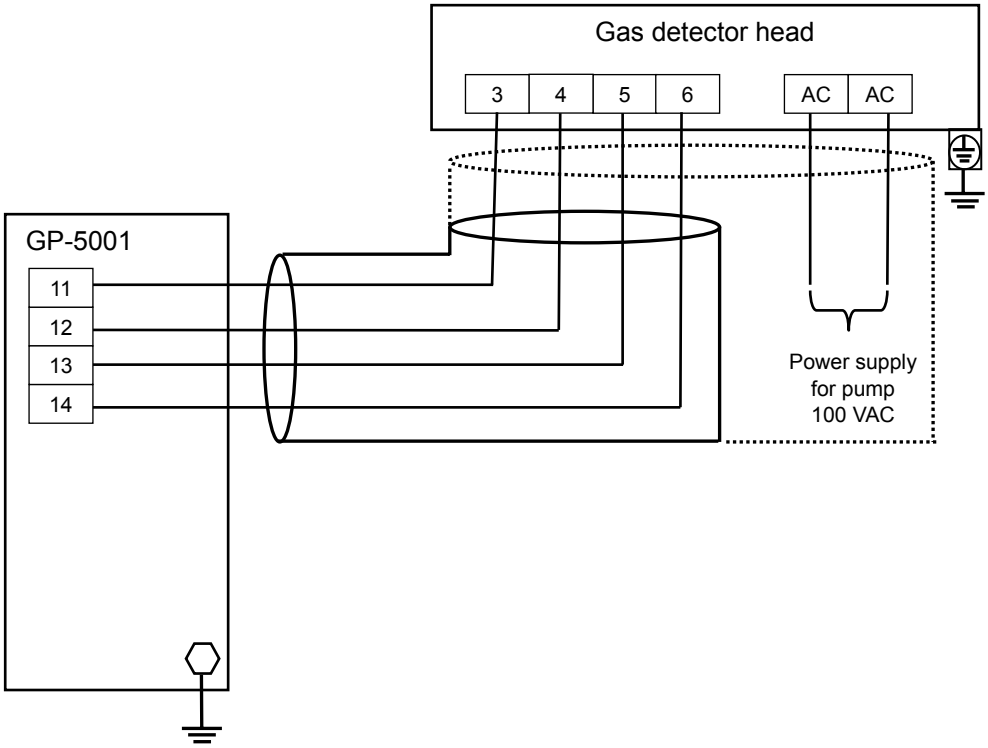

NP-5001

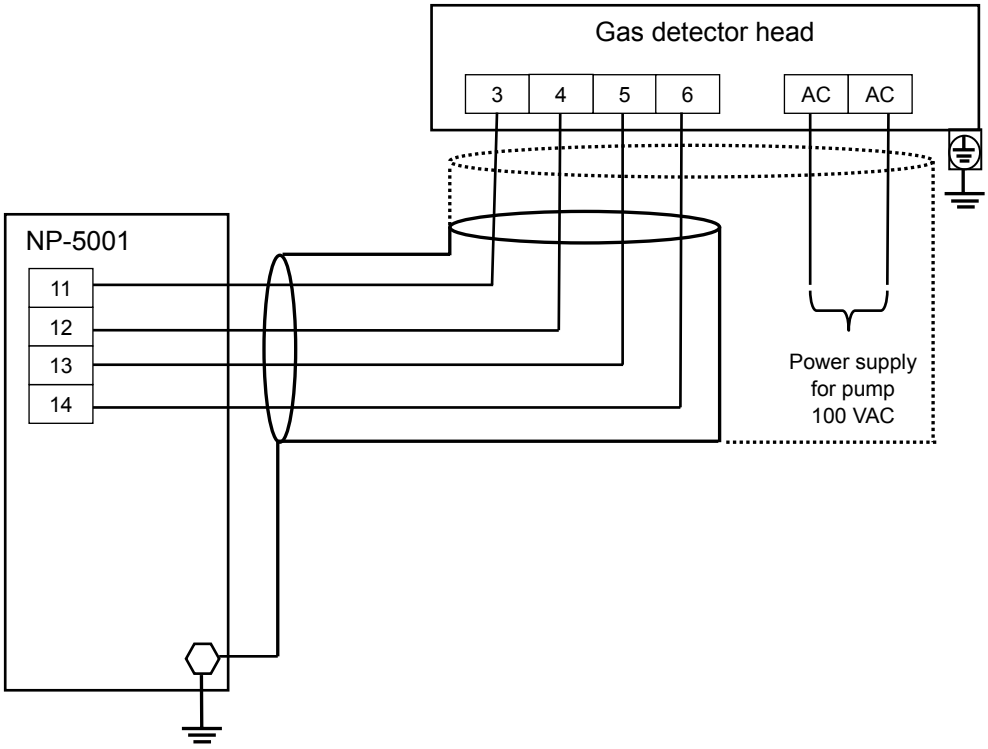

OX-5001, OX-5002

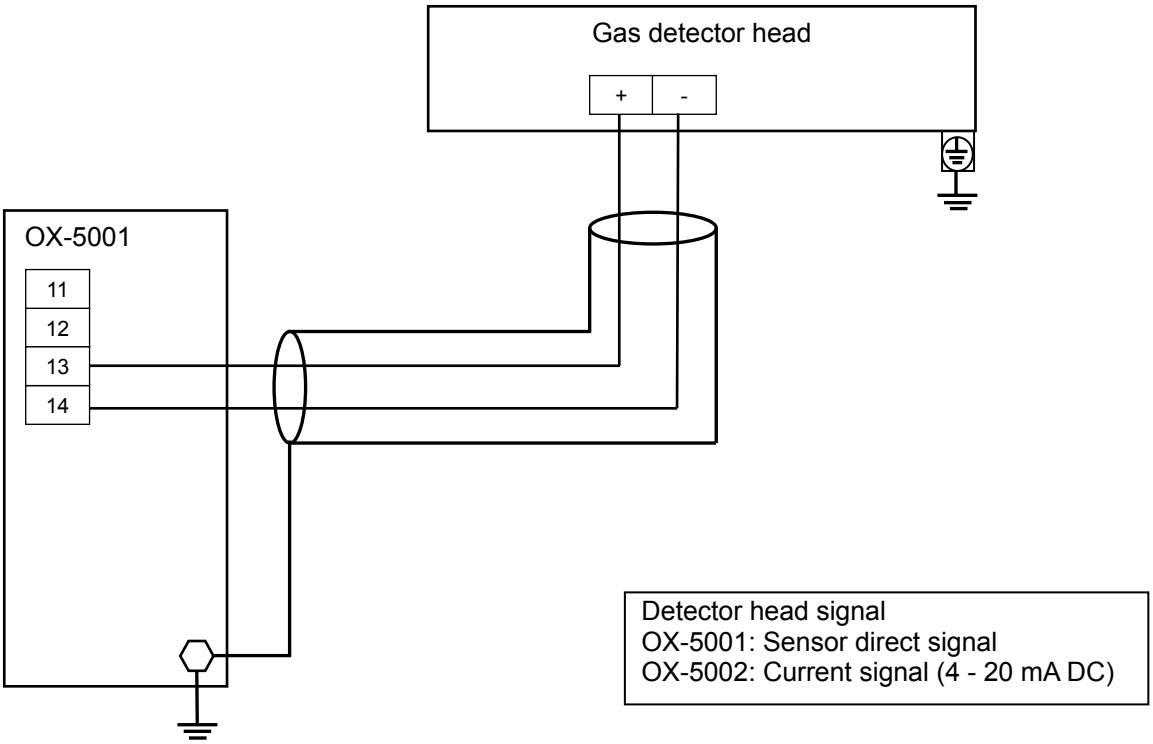

NOTE

To construct an intrinsically safe explosion-proof system by connecting the indicator/alarm unit to a gas detector head with an intrinsically safe explosion-proof structure, connect the dedicated Zener Barrier between them. Read also the operating manual of the gas detector head.

GH-5001

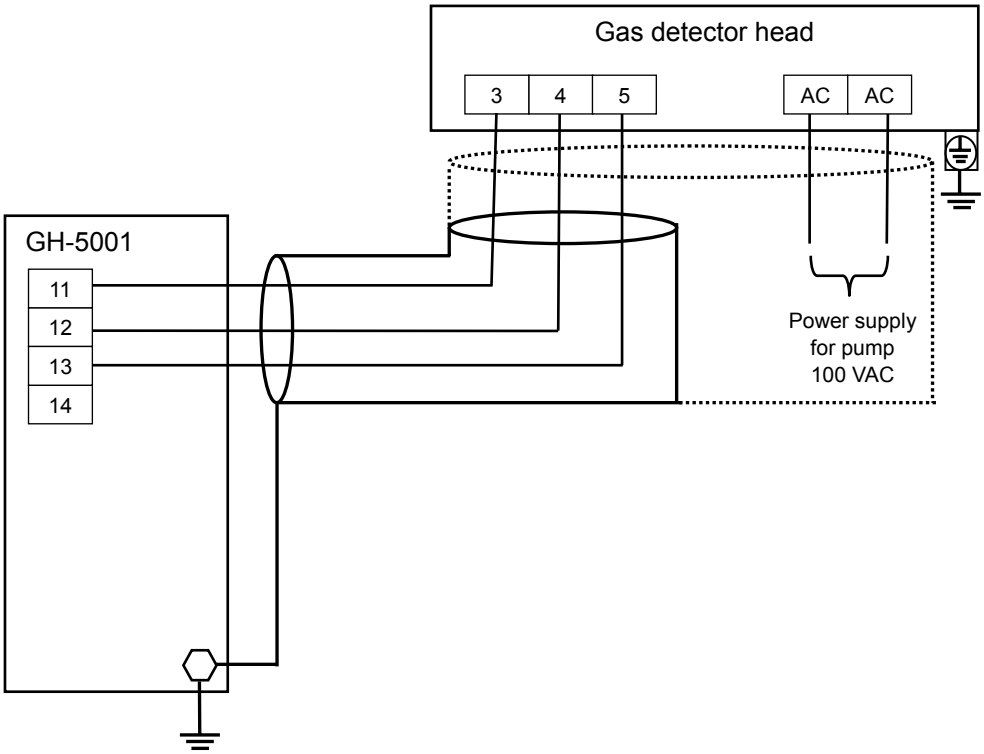

EC-5002

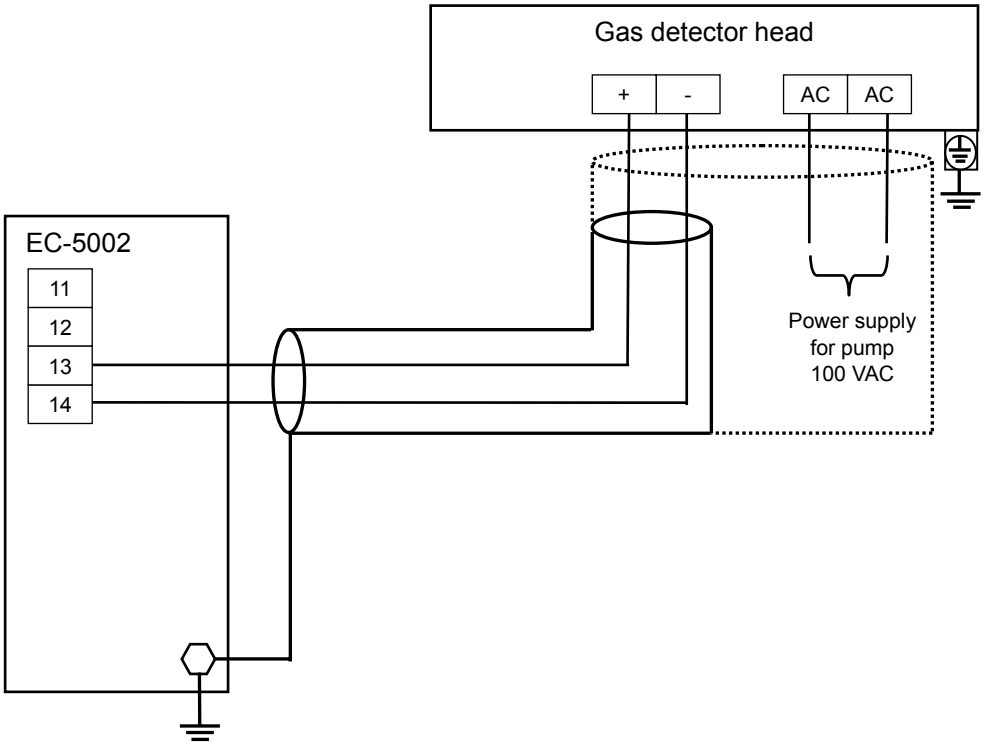

NOTE

To construct an intrinsically safe explosion-proof system by connecting the indicator/alarm unit to a gas detector head with an intrinsically safe explosion-proof structure, connect the dedicated Zener Barrier between them. Read also the operating manual of the gas detector head.

RM-5002

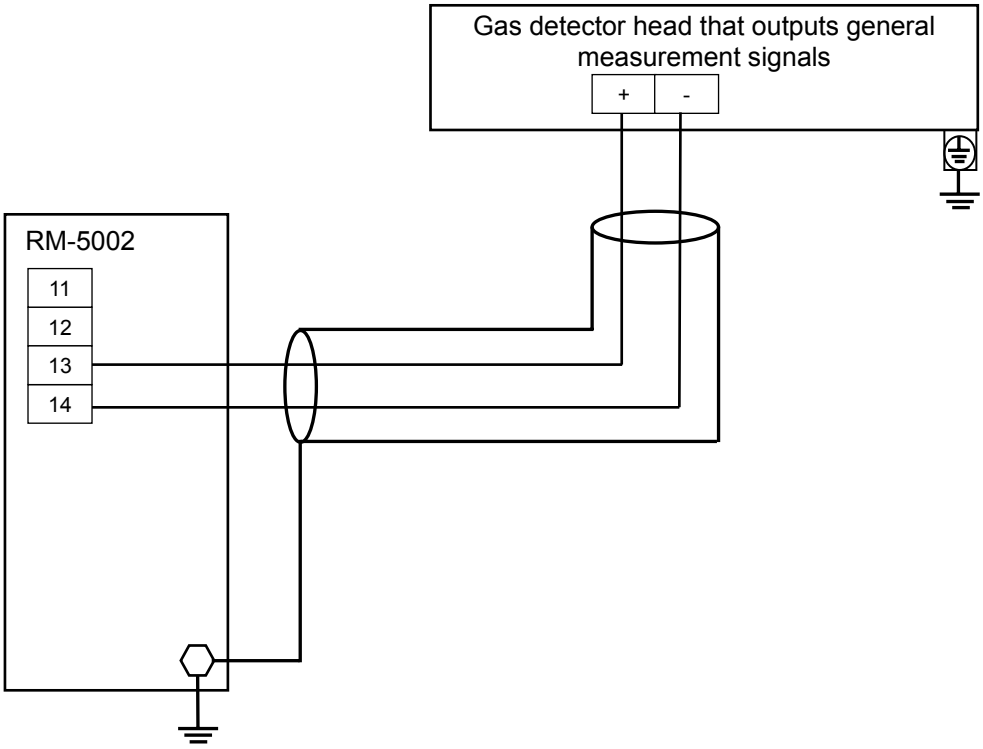

RM-5003

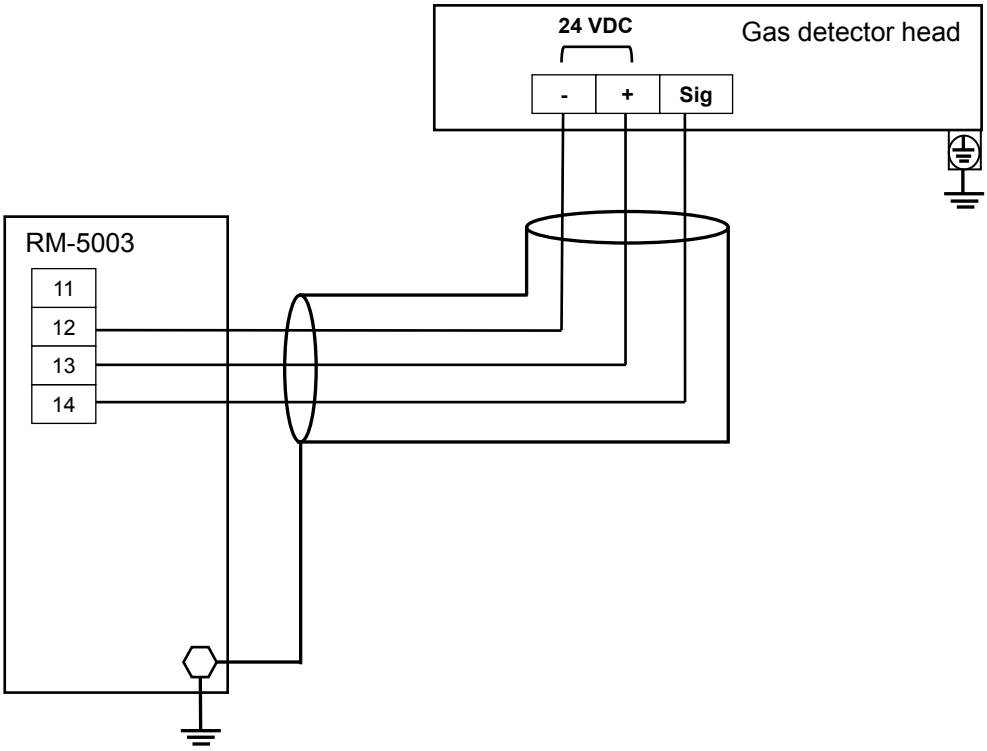

5

How to Operate

5-1. Preparation for start-up

Before connecting a power supply, read and understand the following precautions. Ignoring these precautions may cause an electric shock or damage the indicator/alarm unit.

- Check that the wiring is connected to external device properly.
- Check that the power supply voltage is compliant with the specifications.
- Because the external contact may be activated during the adjustment, take measures to prevent an activated contact from having influences on external circuits.

5-2. Basic operating procedures

Normally, the detection mode is used for normal operations. (The detection mode is activated after the power is turned on.)

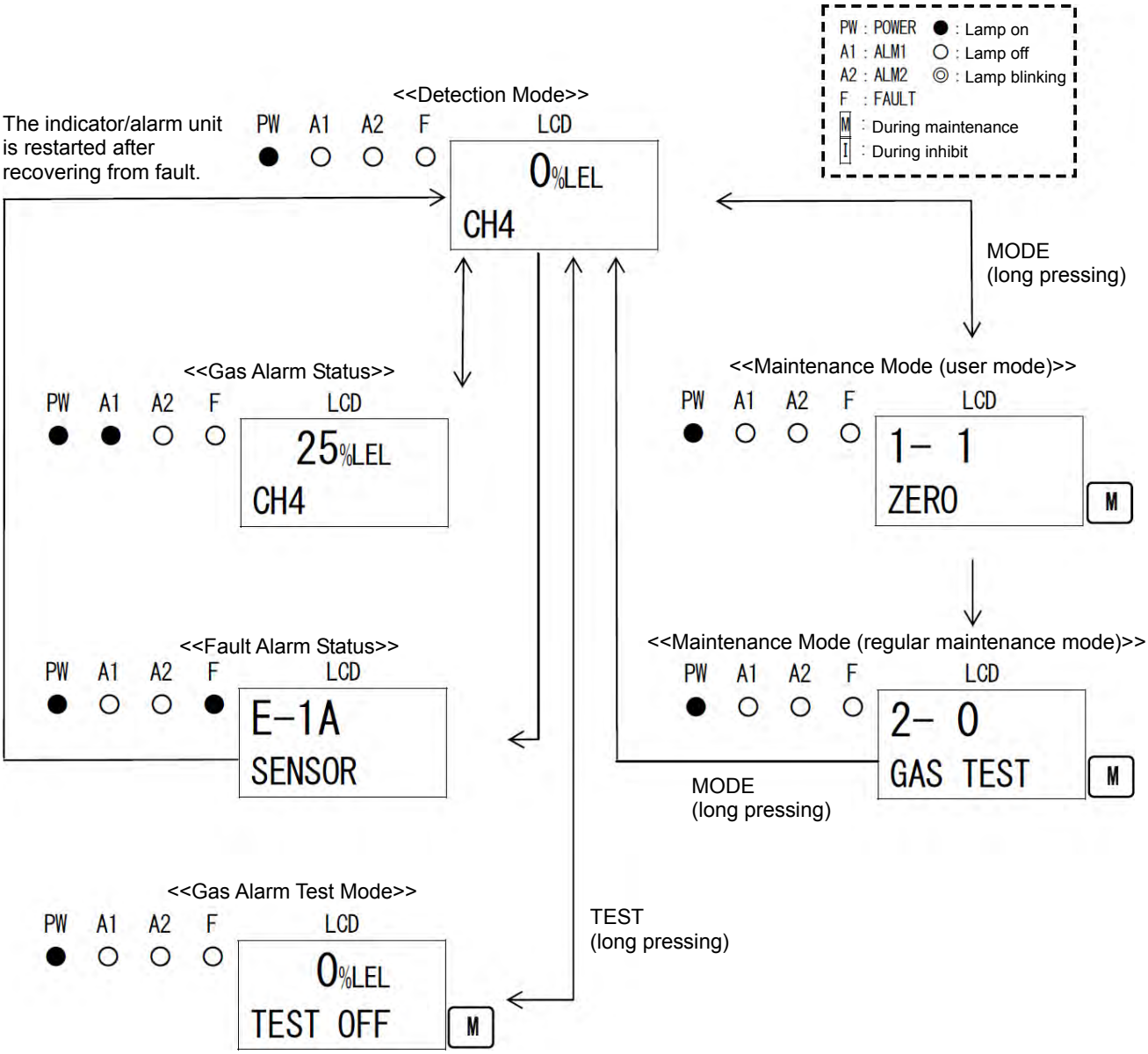

WARNING

When the indicator/alarm unit enters each mode from the detection mode while an alarm is activated, the alarm contact is released.

5-3. How to start the indicator/alarm unit

- Before turning on the power switch, check whether the indicator/alarm unit is installed properly.
- Open the front cover of the indicator/alarm unit to find the power switch.
- Turn ON the power switch.
- After the indicator/alarm unit completes the start-up, it enters the detection mode swiftly.

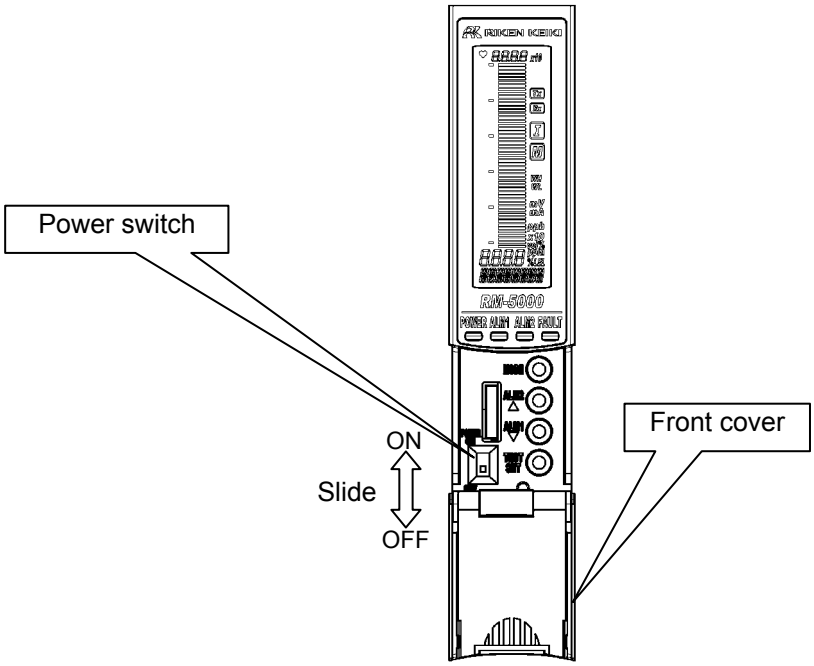

<<Start-up Procedures (approximately 25 seconds for system check of the indicator/alarm unit and alarm deactivation)>>

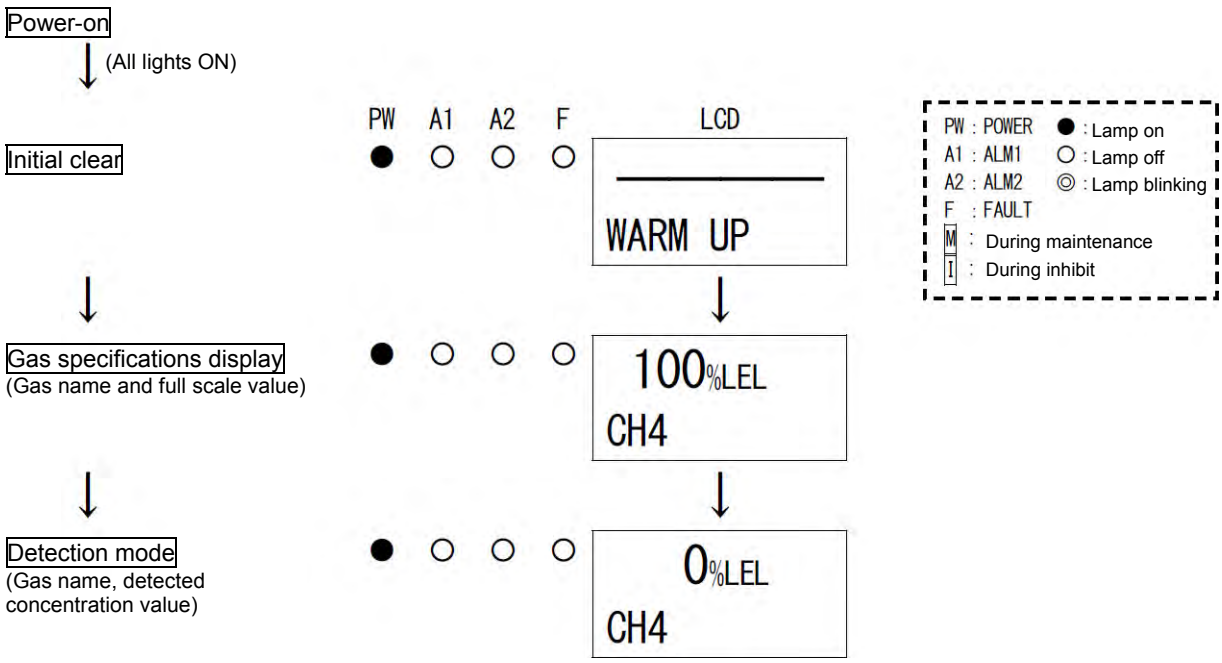

CAUTION

- Do not turn off the indicator/alarm unit during the initial clear.
- If a new sensor is installed or the sensor is replaced after the indicator/alarm unit is started, the sensor must be warmed up for a specified period which is determined depending on the type of the sensor. After the warm-up is completed, perform a gas calibration. Read also the operating manual of the gas detector head.
- During the warm-up, the alarm activation and output signals are unstable. Provide a prior notification to the related sections so that they can prepare for false abnormalities.

5-4. Modes

Details on each mode are provided as follows. (* Operations are slightly different depending on the model.)

Mode	Item	LCD display	Details
Detection Mode	-	Gas concentration Gas name	Normal state
Gas Alarm Test Mode	-	Gas concentration	Perform the alarm test.
Maintenance Mode (User)	Zero Adjustment (Span Adjustment)	1-1 ZERO (1-1 SPAN)	Perform the zero adjustment. (In case of oxygen 0 - 25 %, perform the span adjustment.)
	Setting Display	1-2.CONFIRM	Show the setting of the typical menu. • First alarm setpoint (AL1) • Second alarm setpoint (AL2) • Alarm delay time • Zero suppression value • Zero follower ON/OFF • Indicator type
	Peak Value Display	1-3 PEAK	Display the peak concentration value when a gas is detected.
	Main Unit Version Display	1-4 RM VER	Show the program version of the main unit.
	AMP Version Display	1-5 AMP VER	Show the program version of the amplifier unit.
	RS-485 Address Display	1-6 ADDRESS	Show the address.
	RS-485 Communication Setting Display	1-7 485 PTRN	Show the setting status of the communication function.
	Regular Maintenance Mode Switching	1-8 M MODE	Switch to the regular maintenance mode.
Maintenance Mode (Regular maintenance)	Gas Introduction Display	2-0 GAS TEST	Perform the gas introduction test in the regular maintenance mode.
	Zero Adjustment	2-1 ZERO	Perform the zero adjustment.
	Span Adjustment	2-2 SPAN	Perform the span adjustment.
	Last Calibrated Date	2-3 LAST CAL	Show the last calibrated date.
	Heater Current Display	2-4 CUR CAL	Show the heater current.
	Environmental Setting 1	2-5 SETTING1	Operation setting SE 0 INHIBIT setting (INHIBIT) SE 1 Alarm setpoint value setting (ALM P) SE 2 Alarm delay time setting (ALM DLY) SE 3 Fault test (F TEST)
	Environmental Setting 2	2-6 SETTING2	Functions setting SE 0 Address setting (ADDRESS) SE 1 Date/Time setting (DAY TIME) SE 2 Zero suppression value setting (SUPPRESS) SE 3 Zero suppression type setting (SUP TYPE) SE 4 Contact setting for alarm test (TEST RLY) SE 5 External output setting for alarm test (TEST4-20) SE 6 Energized/De-energized setting (RLY PTRN) SE 7 Alarm type setting (ALM TYP) SE 8 Alarm pattern setting (ALM PTRN) SE 9 Alarm value limiter setting (AL LIMIT) SE10 Fault alarm pattern setting (FLT PTRN) SE11 Zero follower ON/OFF setting (ZERO F) SE12 External output in maintenance mode setting (MNT OUT) SE13 External output adjustment (MA 4-20)
	Environmental Setting 3	2-7 SETTING3	Adjustment and setting SE 0 Amplifier initialization (AMP DEF) SE 1 Heater current adjustment (HEAT ADJ) SE 2 Load voltage adjustment (LOAD ADJ) SE 3 Measured gas selection (GAS SEL) SE 4 Peak hold setting (PEAKHOLD) SE 5 First alarm LCD setting (ALM1 LCD)

			SE 6 Alarm bar display setting (ALM BAR) SE 7 Double range external output setting (DR OUT) SE 8 Low flow rate setting (FLOW SET) SE 9 External output setting (OUT SET) SE10 RS-485 communication setting (485 PTRN) SE11 Green LED brightness adjustment (GRN ADJ) SE12 Red LED brightness adjustment (RED ADJ) SE13 Orange LED brightness adjustment (ORNG ADJ)
	Fault Detailed View	2-8 FAULT	Not used.
	HART Device Synchronization Setting	2-9 HART SYN	Not used.
	HART Device Setting	2-10 HART SET	Not used.
	Return to the user mode	2-11 U MODE	Return to the user mode.
	Factory Mode Switching	2-12 F MODE	Not used.

NOTE

Operations are slightly different depending on the model. Key operations are disabled for the key switches of operation menus not available for the model.

5-5. Detection mode

<Gas Name and Full Scale Display>

Display a gas name, full scale value, etc. that have been set in advance.

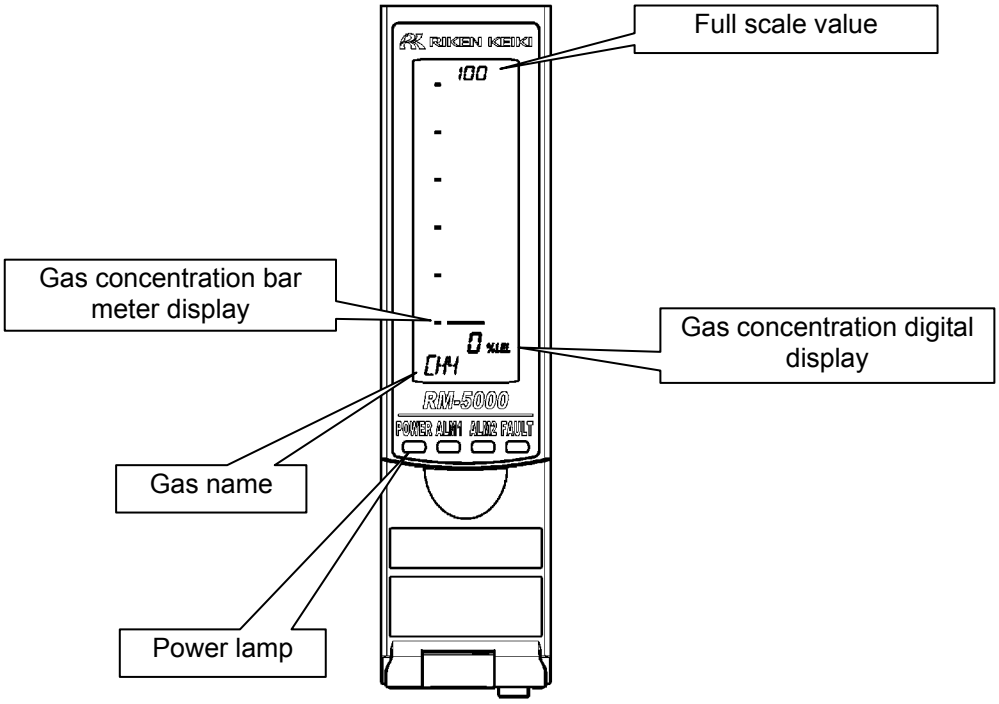

CAUTION

A reading under zero is suppressed with the 10% FS suppression.
A reading that is 10% FS or more under zero is displayed as "-0.0", which prevents an accurate gas detection and needs the zero adjustment. For information on the suppression function, see "6-4. Other functions".

NOTE

NC-5001W offers two reading ranges (low and high ranges).
If the displayed combustible gas concentration rises above the full scale of the low range, the display is automatically switched to the high range.
On the other hand, if the gas concentration drops below the full scale of the low range, the display is automatically switched back to the low range.
The low range is indicated by lighting of the WL display, and the high range by lighting of the WH display, informing the present reading range (low or high range).

Example

Target gas	:	Isobutane		
Reading range	:	0-2000 ppm	/	0 - 100%LEL
Status display	:	WL (low range)	/	WH (high range)

NOTE

At a low temperature, the response of the LCD display may get slow down.

5-6. Alarm test mode

This is used when dummy signals the same as the signals of the gas concentration are generated to check the alarm lamp activation of the indicator/alarm unit and the transmission to external circuits.

WARNING

Before starting the alarm test (transmission test), provide a notification to the related sections so that they can prepare for false abnormalities (external output signals and alarm contact). After the test is completed, never fail to press the TEST key to return to the detection mode. (If the indicator/alarm unit remains in the alarm test mode, it automatically returns to the detection mode in ten hours.)

<<Alarm Test Mode>>

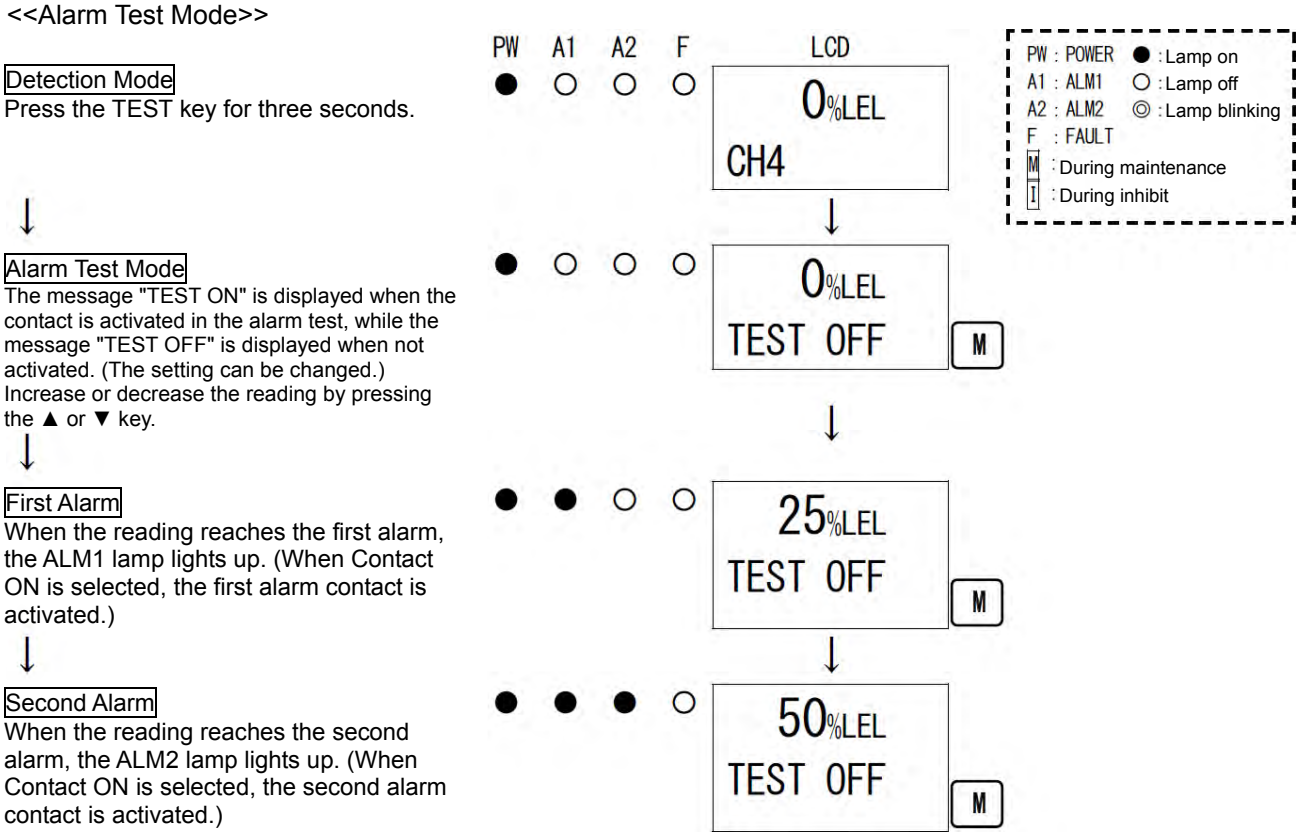

5-7. User mode

WARNING

After the adjustment is completed, never fail to press the MODE key to return to the detection mode. (If the indicator/alarm unit remains in the user mode, it automatically returns to the detection mode in ten hours.)

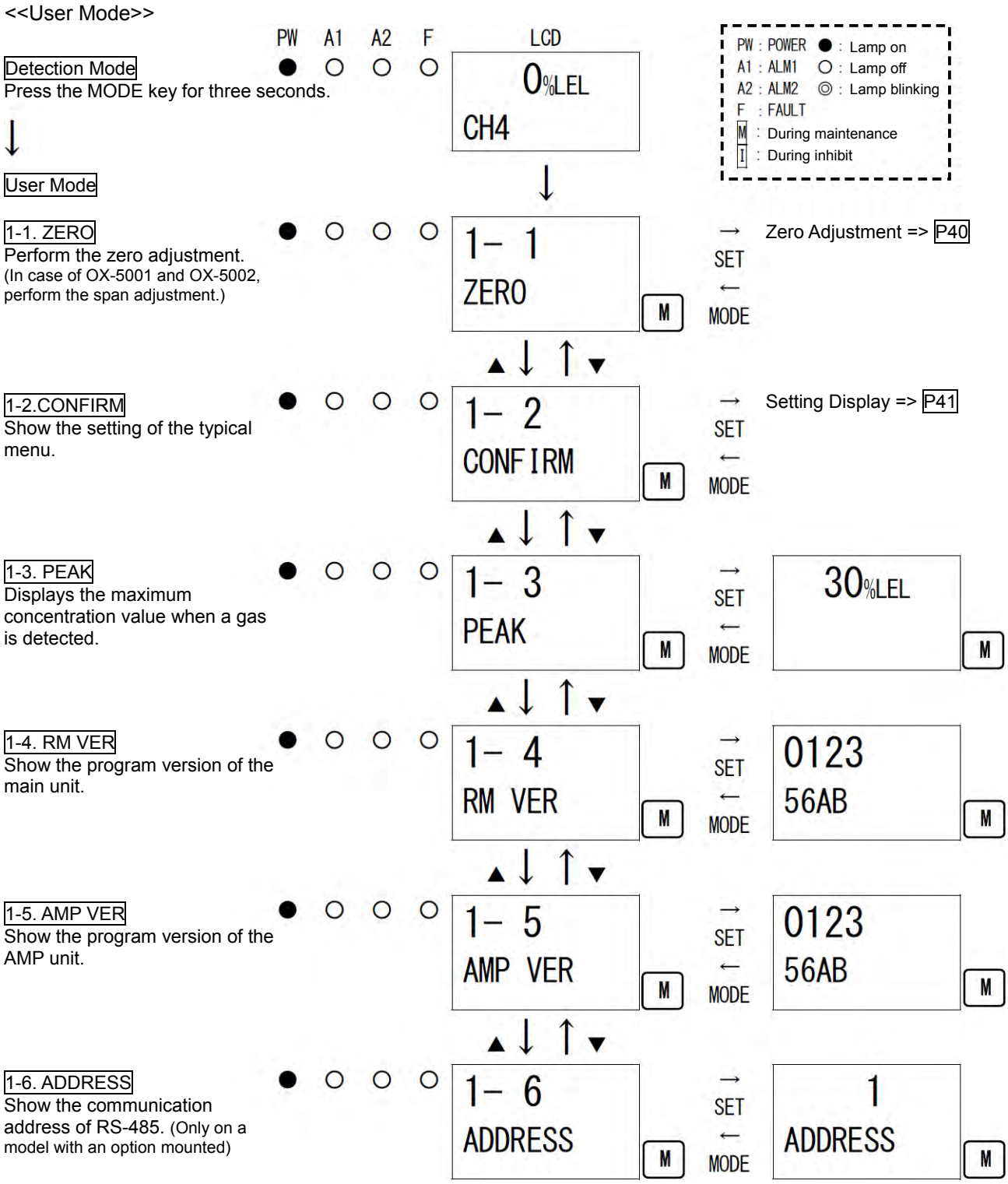

1-7. 485 PTRN
Show the communication setting of RS-485. (Only on a model with an option mounted)

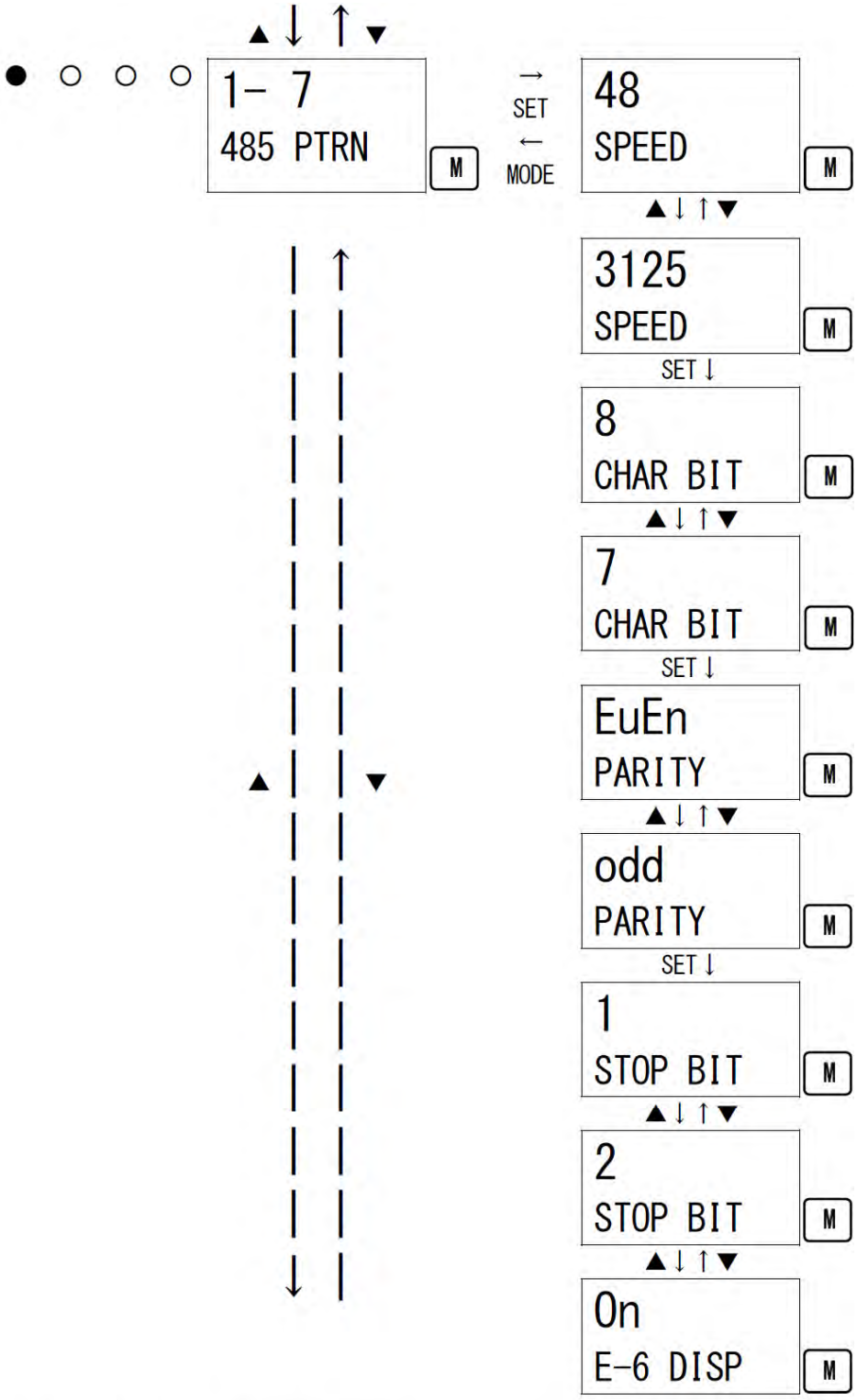

1-8. M MODE
Switch to the regular maintenance mode.

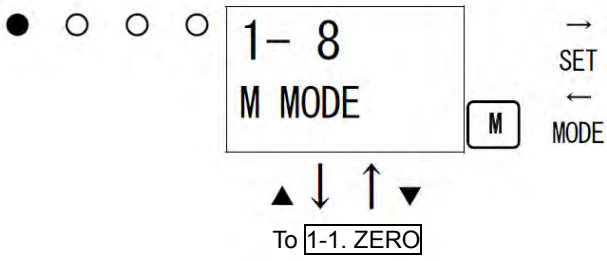

See "7-2. Regular maintenance mode".

<Zero Adjustment "1-1">

This is used to perform the zero adjustment. Before starting the zero adjustment, let the detector head (sensor) draw the zero adjustment gas and wait until the reading is stabilized.
For oxygen deficiency alarm specification (O2:0 - 25%), "1-1" is the span adjustment. In this case, the AIR adjustment is performed, so that fresh air must be introduced to adjust it to 20.9%. For information on the span adjustment, see “7-3. How to perform a gas calibration”.

<<Zero Adjustment>>

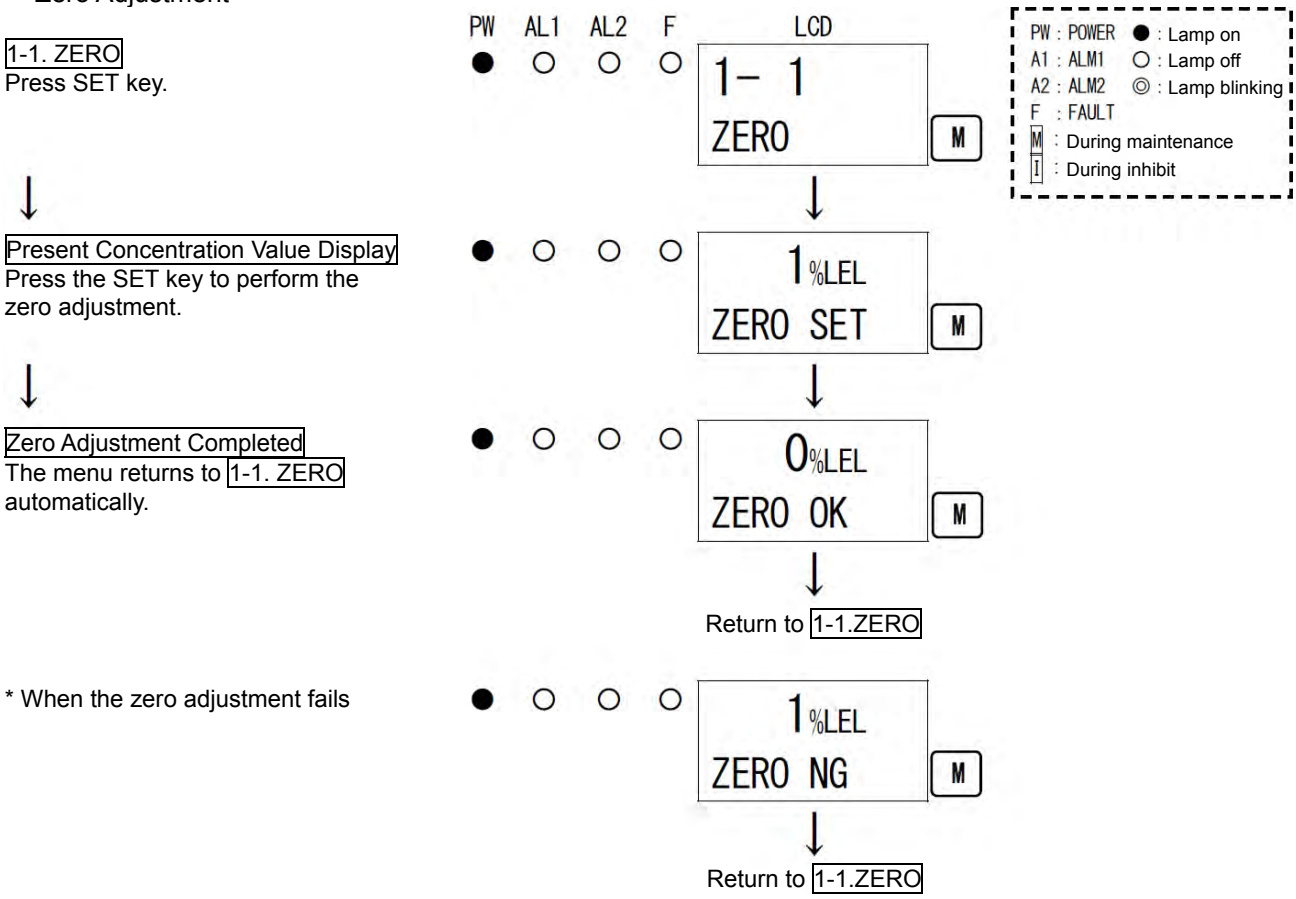

CAUTION

In case of GH-5001, always perform both the zero adjustment and the span adjustment. Perform the zero adjustment and the span adjustment in this order. If they are performed in a wrong order or only one of them is performed, accurate gas detection cannot be ensured.

<Setting Display "1-2">

This is used to check the setting of typical menus.

<<Setting Display>>

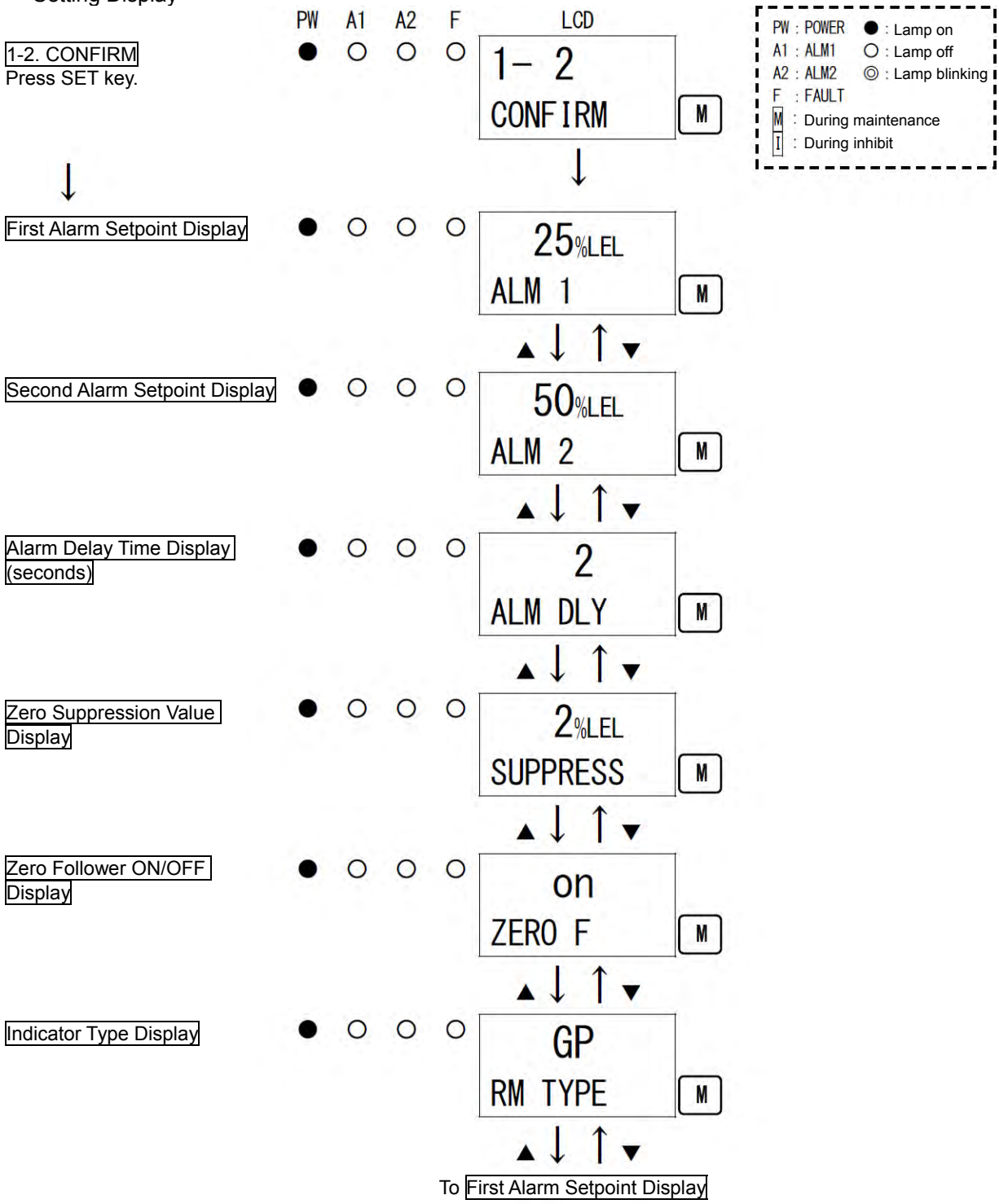

5-8. How to exit

To turn off the indicator/alarm unit, open the front cover of the main unit, and turn "OFF" the power switch. Then, turn off the power supply (24 VDC) to the indicator/alarm unit.

WARNING

- When the indicator/alarm unit is turned off, an alarm may be activated on the upper (central) system.
  Before turning off the indicator/alarm unit, the inhibit (point skip) on the upper (central) system must be activated.
  Decide whether the power can be turned off by checking the operation of the devices connected to the external output or external contact output terminal of the indicator/alarm unit.
- If the alarm contact is energized (option), it is activated when the indicator/alarm unit is turned “OFF”.

6

Operations and Functions

6-1. Gas alarm activation

Gas alarm: Triggered when the concentration of detected gas reaches or exceeds the alarm setpoint value.
<<Self-latching>>

NOTE

The alarm setpoint (first alarm and second alarm) is factory-set. Although the alarm delay time (standard: 2 seconds) works in the indicator/alarm unit to prevent a false activation, it can be cancelled if not needed.

<Display Operation>

Gas Concentration Display

In case of over the detection range (Over Scale), "∩∩∩∩" is displayed on the LCD.

Power Indicator Lamp (POWER: Green)

This lights up continuously.

Alarm Indicator Lamp (ALM1: Red), (ALM2: Red)

The alarm consists of two steps. Each of them is triggered when the respective alarm setpoint value is reached to or exceeded.
The alarm indicator lamp goes out when the gas concentration settles below the alarm setpoint after a reset operation.

First alarm

Second alarm

<Contact Activation>

The alarm contact consists of two steps. Each of them is triggered when the respective alarm setpoint value is reached to or exceeded.
The alarm contact is reset when the gas concentration settles below the alarm setpoint after a reset operation.

"Alarm Pattern Example (H-HH)"

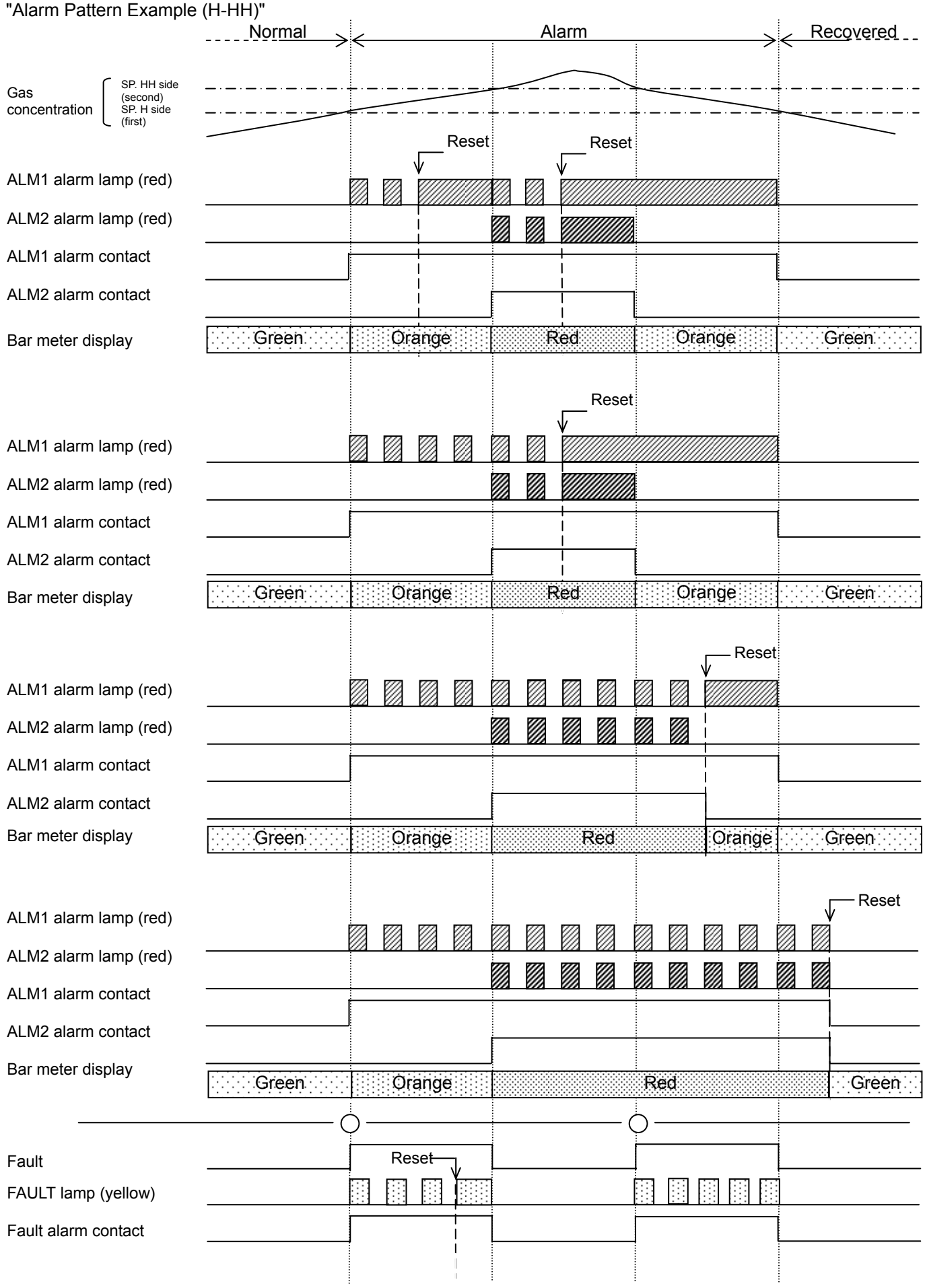

"Alarm Pattern Example (L-LL)"

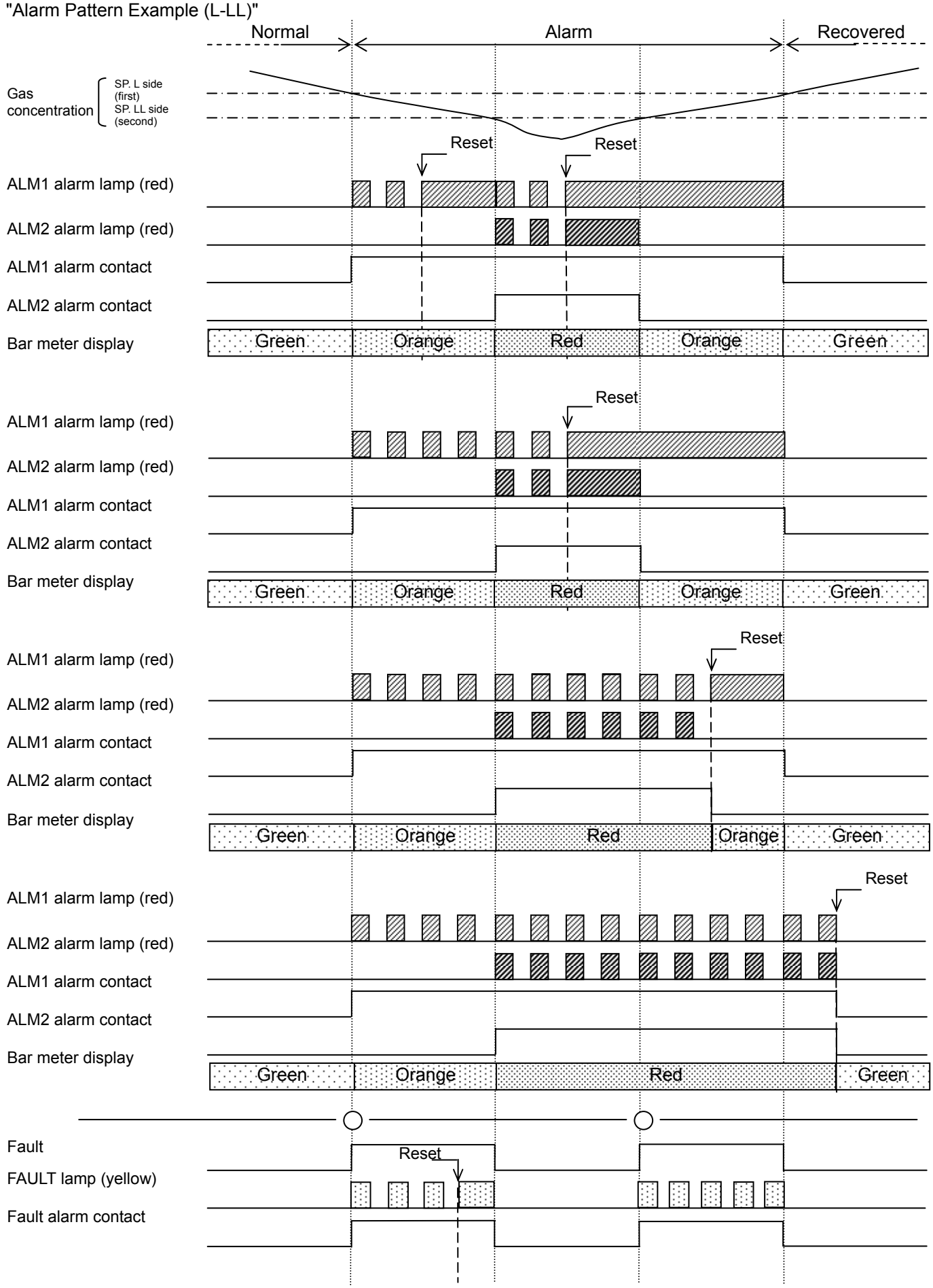

<Response to Gas Alarm>

In case of responding to a leaked gas

When a gas alarm is triggered, take actions in accordance with your management rules of gas alarm. Normally, take the following actions.

- Check the reading of the indicator/alarm unit.

NOTE

If a gas leak is momentary, the reading may already have dropped when you check it. In addition, when the alarm is triggered by noise or other incidental conditions other than a gas, the reading may have already dropped.

- Based on your management rules of gas alarm, no one should be allowed to access the monitored zone to ensure safety.
- If the Gas Concentration Display continues to be shown, close the main valve of the gas, and then check that the gas concentration reading is dropped.
- Assuming that gases remain, wear protective equipment to avoid dangers and go to the gas leak point, and then check if gases remain using a portable gas detector etc.
- If you can determine that the point is free from dangers, take actions to fix the gas leak.

6-2. Fault alarm activation

A fault alarm is triggered when the indicator/alarm unit detects abnormalities <<Auto-Reset>>.
After a fault alarm is triggered, the FAULT lamp (yellow) blinks and an error message is displayed on the LCD. Determine the causes and take appropriate actions.
After the indicator/alarm unit is successfully returned from the fault, it restarts with the process normally performed right after it is turned on (initial clear).
If the indicator/alarm unit has problems and is repeatedly malfunctioning, contact RIKEN KEIKI immediately.

* Display example: E-1 DETECTOR sensor abnormality

NOTE

For information on malfunctions (error messages), see "9. Troubleshooting".

6-3. External output operation

Specifications		4 - 20 mA	RS-485 (option)
Signal Transmission System		Electric current transmission (non-isolated)	Two-wire digital data transmission system
Transmission Path		CVVS	KPEV-S
Transmission Distance		Below 1 km	(Depending on the system designing conditions)
Connection Load Resistance		Below 300 Ω	-
(1)	Detection Mode (No Alarm)	4 - 20 mA (concentration output)	Concentration data
(2)	Detection Mode (Gas Alarm)	4 - 20 mA (concentration output)	Concentration data, Alarm bits
(3)	Initial Clear	Depending on the setting of (4) 2.5 mA setting: 2.5 mA 4 mA, HOLD, 4 - 20 mA setting: 4 mA*	Initial bit
(4)	Maintenance mode	2.5 mA setting: 2.5 mA 4 mA setting: 4 mA* HOLD setting: The previous value retained 4-20 mA setting: 4 - 20 mA (concentration output)	Concentration data, Adjustment bit
(5)	Alarm Test	Output ON setting: 4 - 20 mA (concentration output) Output OFF setting: Depending on the setting of (4)	Concentration data, Adjustment bit, Test bit
(6)	Fault Alarm	0.5 mA (Fixed)	Fault bits
(7)	Inhibit	Depending on the setting of (4) 2.5 mA setting: 2.5 mA 4 mA, HOLD, 4 - 20 mA setting: 4 mA*	Concentration data, Adjustment bit, Inhibit bit
(8)	Power Off	0 mA	Signal OFF

* OX-5001,OX-5002: 0 - 25 vol% is equivalent of AIR (20.9 vol% = 17.4 mA)

Example of Gas Concentration and External Output (4 - 20 mA)

CAUTION

<<4 - 20 mA>>

- The 4 - 20 mA output is already adjusted. In case of over scale, an output will not exceed 22 mA.
- Output during inhibit or initial clear is based on 4 - 20 mA output setting in the maintenance mode.

<GP-5001, NC-5001, NP-5001, SP-5001, GH-5001, EC-5002, OX-5001, OX-5002>

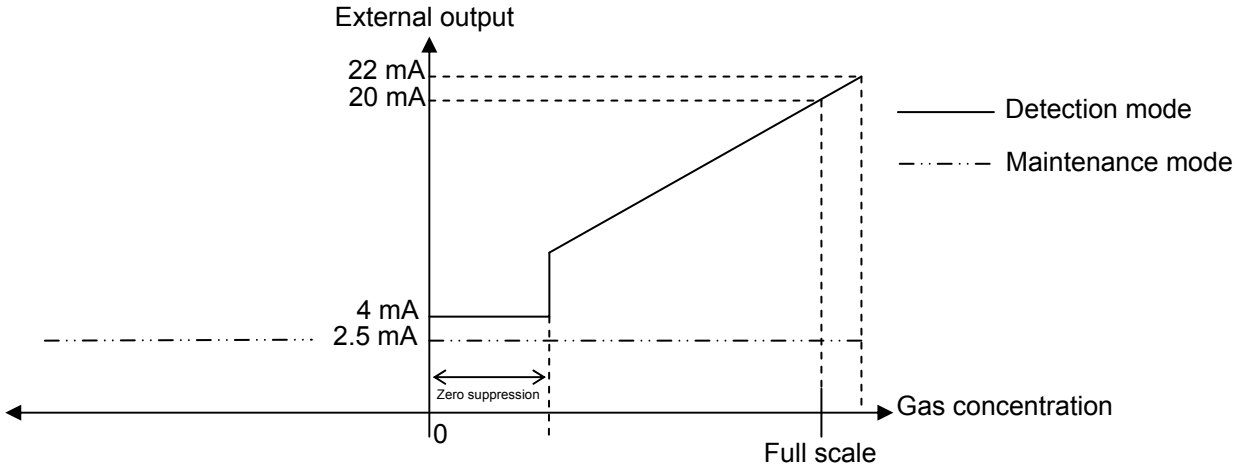

<NC-5001W>

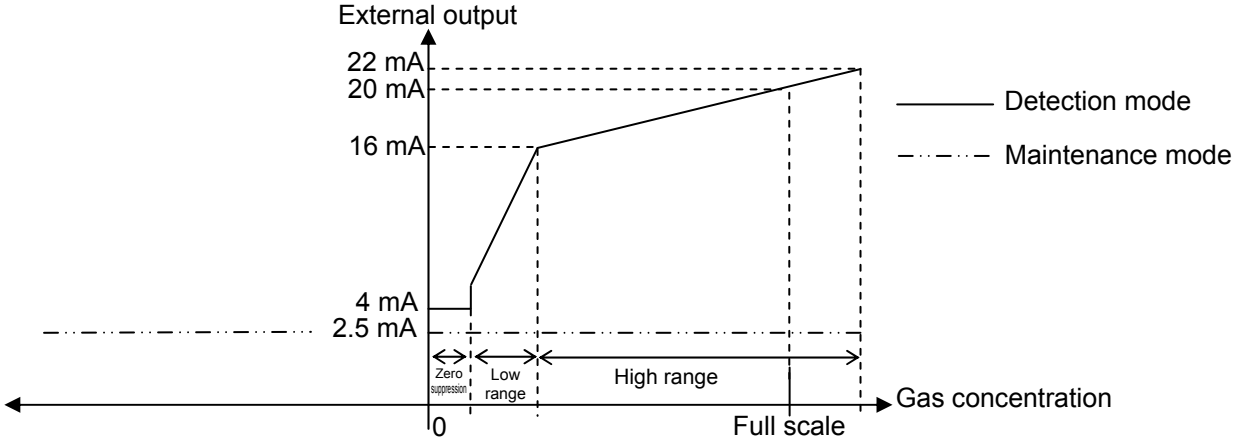

NOTE

NC-5001W offers two reading ranges (low and high ranges).
If the displayed combustible gas concentration rises above the full scale of the low range, the display is automatically switched to the high range.
On the other hand, if the gas concentration drops below the full scale of the low range, the display is automatically switched back to the low range.
The low range is indicated by lighting of the WL display, and the high range by lighting of the WH display, informing the present reading range (low or high range).

Example

Target gas	:	Isobutane		
Reading range	:	0-2000 ppm	/	0 - 100%LEL
Status display	:	WL (low range)	/	WH (high range)

6-4. Other functions

<Suppression Function>

Some types of detector heads connected to the indicator/alarm unit are influenced by environmental changes (temperature, humidity, and other characteristics) or interference gases (interference characteristics) in no small measure, which affects the reading.
Therefore, the reading might fluctuate around zero even in a normal state with no gas leakage.
This function obscures influences by environmental changes and interference gases around zero that have no meaning for your management rules of gas alarm.This function is used to hide (suppress) the fluctuation of the reading under the setting value, indicating zero.

<<Example: CH4 0 – 100% LEL Specifications>>

5%LEL
CH4

Suppression Disabled
A fluctuation around zero is displayed as the reading.

↓

0%LEL
CH4

Suppression Enabled
A fluctuation under the setting value is hidden with zero.
(Zero suppression)

NOTE

- In the maintenance mode, this function is disabled and the fluctuation of the reading under the setting value is displayed.
- When a sensor unit with the oxygen deficiency alarm (O2: 0 - 25 vol%) is equipped, the zero suppression is shifted to AIR suppression (20.9 vol%) automatically. That is, a small variation of the reading around 20.9 vol% is displayed as 20.9 vol%.

CAUTION

A reading under zero is suppressed with the 10% FS suppression.
A reading that is 10% FS or more under zero is displayed as "-0.0", which prevents an accurate gas detection and needs the zero adjustment.

<Zero Follower Function>

Some types of detector heads connected to the indicator/alarm unit might have sensitivity variations after being used for a long period.
This function corrects the fluctuation of the reading at the zero point (zero drift) among the sensitivity variations over time by a program manipulation to stabilize the zero point.

Zero Follower Off

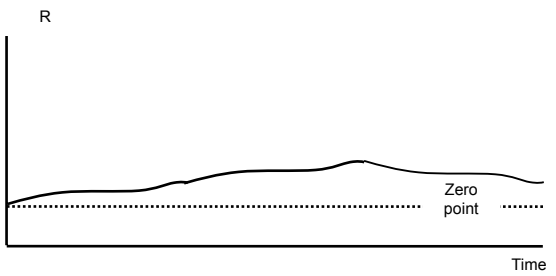

* The zero drift of the sensor appears as the reading.

⇒

Zero Follower On

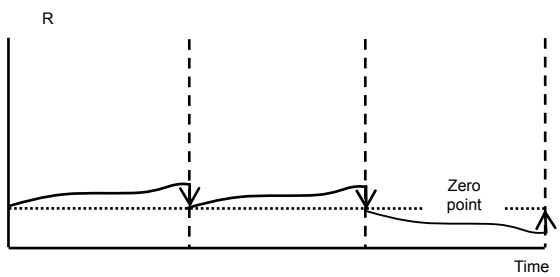

* The zero-adjustment is made periodically.

<Peak Hold Function>

The maximum (or minimum) concentration value after an alarm is triggered is displayed using the bar meter blinking and a numeric value even after the reading returns to a normal status. The numeric value is displayed in 1-3.PEAK in the maintenance mode (user).
To disable the peak display, keep the SET key pressed in 1-3.PEAK in the maintenance mode (user).

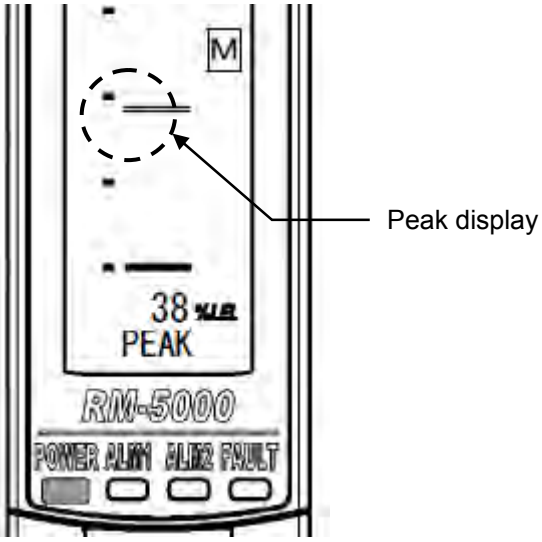

<Calibration History/Alarm Trend History/Event History Functions>

The indicator/alarm unit has history functions. To use these functions, please contact RIKEN KEIKI.

7

Maintenance

The indicator/alarm unit is an important instrument for the purpose of safety.
To maintain the performance of the indicator/alarm unit and improve the reliability of safety, perform a regular maintenance.

NOTE
To use the multi-unit case, also refer to the separate operating manual.

7-1. Maintenance intervals and items

- Daily maintenance: Perform maintenance before beginning to work.
- Monthly maintenance: Perform maintenance on the alarm circuit (alarm test) once a month.
- Regular maintenance: Perform maintenance once or more for every six months to maintain the performance as a safety unit.

Maintenance item	Maintenance content	Daily maintenance	Monthly maintenance	Regular maintenance
Power Supply Check	Check that the power lamp lights up.	○	○	○
Concentration Display Check	Check that the concentration display value is zero (or 20.9% on the oxygen deficiency meter). When the reading is incorrect, perform the zero adjustment after ensuring that no other gases exist around the detector head.	○	○	○
Alarm Test	Inspect the alarm circuit by using the alarm test function.	–	○	○

<About Maintenance Services>

- We provide services on regular maintenance including span adjustment, other adjustments and maintenance.
  To make the calibration gas, dedicated tools, such as a gas cylinder of the specified concentration and gas sampling bag must be used.
  Our qualified service engineers have expertise and knowledge on the dedicated tools used for services, along with other products. To maintain the safety operation of the indicator/alarm unit, please use our maintenance service.
- The followings are typical maintenance services. Please contact RIKEN KEIKI for more information.

Main Services

Power Supply Check	:	Checks the power supply voltage. Verifies that the power lamp lights up. (Verifies that relevant points can be identified on the system.) (When a UPS (uninterruptible power system) is used, checks the operation with the UPS.)
Concentration Display Check	:	Verifies that the concentration display value is zero (or 20.9 vol% on the oxygen deficiency meter) by using the zero gas. Performs the zero adjustment (fresh air adjustment) if the reading is incorrect.
Flow Rate Check	:	Checks the flow rate indicator to find abnormalities. Checks the flow rate by using an external flow meter to verify the correctness of the flow rate indicator on the device. If the flow rate is incorrect, performs the flow rate adjustment.
Filter Check	:	Checks the dust filter for dust or clogging. Replaces a dirty or clogged dust filter.
Alarm Test	:	Inspects the alarm circuit by using the alarm test function. • Checks the alarm lamps. (Checks each activation of ALM1 and ALM2.) • Checks the external alarm. (Checks the activation of the external alarm, such as a buzzer.)
Span Adjustment	:	Performs the span adjustment by using the calibration gas.
Gas Alarm Check	:	Checks the gas alarm by using the calibration gas. • Checks the alarm. (Checks the alarm activation when the alarm setpoint is reached.) • Checks the delay time. (Checks time to delay until the alarm is triggered.) • Checks the alarm lamps. (Checks each activation of ALM1 and ALM2.) • Checks the external alarm. (Checks the activation of external alarms, such as a buzzer and reset signal.)
Cleaning and Repair of Device (visual diagnosis)	:	Checks dust or damage on surface, cover, or internal parts of the indicator/alarm unit, cleans and repairs such parts of the device. Replaces parts which are cracked or damaged.
Device Operation Check	:	Uses the keys to check the operation of functions and parameters.
Replacement of Consumable Parts	:	Replaces consumable parts, such as a sensor, filter and pump.

7-2. Regular maintenance mode

WARNING

After the adjustment is completed, never fail to press the MODE key to return to the detection mode. (If the indicator/alarm unit remains in the maintenance mode, it automatically returns to the detection mode in ten hours.)

Mode	Item	LCD display	Details
Maintenance Mode (Regular maintenance)	Gas Introduction Display	2-0 GAS TEST	Perform the gas introduction test in the regular maintenance mode.
	Zero Adjustment => P70	2-1 ZERO	Perform the zero adjustment.
	Span Adjustment => P71	2-2 SPAN	Perform the span adjustment.
	Last Calibrated Date	2-3 LAST CAL	Show the last calibrated date.
	Heater Current Display	2-4 CUR CAL	Display the heater current value.
	Environmental Setting 1 => P58	2-5 SETTING1	Operation setting SE 0 INHIBIT setting (INHIBIT) SE 1 Alarm setpoint value setting (ALM P) => P58 SE 2 Alarm delay time setting (ALM DLY) SE 3 Fault test (F TEST) => P58
	Environmental Setting 2 => P60	2-6 SETTING2	Functions setting SE 0 RS-485 address setting (ADDRESS) SE 1 Date/Time setting (DAY TIME) => P62 SE 2 Zero suppression value setting (SUPPRESS) SE 3 Zero suppression type setting (SUP TYPE) SE 4 Contact setting for alarm test (TEST RLY) SE 5 External output setting for alarm test (TEST4-20) SE 6 Energized/De-energized setting (RLY PTRN) => P63 SE 7 Alarm type setting (ALM TYP) SE 8 Alarm pattern setting (ALM PTRN) SE 9 Alarm value limiter setting (AL LIMIT) SE10 Fault alarm pattern setting (FLT PTRN) SE11 Zero follower ON/OFF setting (ZERO F) SE12 External output in maintenance mode setting (MNT OUT) SE13 External output adjustment (MA 4-20)
	Environmental Setting 3 => P65	2-7 SETTING3	Functions setting SE 0 Amplifier initialization (AMP DEF) SE 1 Heater current adjustment (HEAT ADJ) SE 2 Load voltage adjustment (LOAD ADJ) SE 3 Measured gas selection (GAS SEL) SE 4 Peak hold setting (PEAKHOLD) SE 5 First alarm LCD setting (ALM1 LCD) SE 6 Alarm bar display setting (ALM BAR) SE 7 Double range external output setting (DR OUT) SE 8 Low flow rate setting (FLOW SET) SE 9 External output setting (OUT SET) SE10 RS-485 communication setting (485 PTRN) SE11 Green LED brightness adjustment (GRN ADJ) SE12 Red LED brightness adjustment (RED ADJ) SE13 Orange LED brightness adjustment (ORNG ADJ)
	Fault Investigation	2-8 FAULT	Not used.
	HART Device Synchronization Setting	2-9 HART SYN	Not used.
	HART Device Setting	2-10 HART SET	Not used.
	Return to the user mode.	2-11 U MODE	Returns to the user mode "1-1".
	Factory Mode Switching	2-12 F MODE	Not used.

NOTE

Operations are slightly different depending on the model. Key operations are disabled for the key switches of operation menus not available for the model.

<<Regular Maintenance Mode>>

PW : POWER ● : Lamp on
A1 : ALM1 ○ : Lamp off
A2 : ALM2 ◎ : Lamp blinking
F : FAULT
M : During maintenance
I : During inhibit

User Mode
In "1-8.M MODE", press the SET key.

↓

Then press the SET key again for three seconds.

↓

Regular Maintenance Mode

	PW	A1	A2	F	LCD		
User Mode	●	○	○	○	1- 8 M MODE	M	
	●	○	○	○	– – – – M MODE	M	
2-0. GAS TEST Perform a test with the gas. Similar to the detection mode, the reading changes and the alarm lamp lights up after the gas is introduced, but the contact is not activated.	●	○	○	○	2- 0 GAS TEST	M	→ SET ← MODE: 50%LEL GAS TEST (M) ↓(Alternate Display)↑ 50%LEL CH4 (M)
2-1. ZERO Perform the zero adjustment.	●	○	○	○	2- 1 ZERO	M	→ SET ← MODE: Zero Adjustment => P69
2-2. SPAN Perform the span adjustment.	●	○	○	○	2- 2 SPAN	M	→ SET ← MODE: Span Adjustment => P70
2-3. LAST CAL Show the last calibrated date. (Example: 2011/01/01 12:00)	●	○	○	○	2- 3 LAST CAL	M	→ SET ← MODE: 1200 20110101 (M)
2-4. HEAT CUR Display the value of a current that runs in the heater of the sensor. (GP-5001, NC-5001, NC-5001W, GH-5001 only)	●	○	○	○	2- 4 CUR CAL	M	→ SET ← MODE: 141mA CUR CAL (M)
2-5. SETTING1 Specify the environmental setting 1.	●	○	○	○	2- 5 SETTING1	M	→ SET ← MODE: Environmental Setting 1 => P57

2-6. SETTING2
Specify the environmental setting 2.

● ○ ○ ○ 2-6 SETTING2 M → SET ← MODE Environmental Setting 2 => P59

▲↓ ↑▼

2-7. SETTING3
Specify the environmental setting 3.

● ○ ○ ○ 2-7 SETTING3 M → SET ← MODE Environmental Setting 3 => P64

▲↓ ↑▼

2-8. FAULT
This is used (by the manufacturer) to investigate and analyze the causes of faults. This is not used by the user.

● ○ ○ ○ 2-8 FAULT M

▲↓ ↑▼

2-9. HART SET
Used for synchronization setting of HART devices.(Only on a model with an option mounted)

● ○ ○ ○ 2-9 HART SYN M

▲↓ ↑▼

2-10. HART SET
Used for setting of HART devices.(Only on a model with an option mounted)

● ○ ○ ○ 2-10 HART SET M

▲↓ ↑▼

2-11. M MODE
Used to return to the user mode.

● ○ ○ ○ 2-11 U MODE M

▲↓ ↑▼

2-12. F MODE
Changes to the factory mode. This is not used by the user.

● ○ ○ ○ 2-12 F MODE M

▲↓ ↑▼

To 2-0.GAS TEST

<Environmental Setting 1 "2-5">

In the environmental setting 1, specify the operation setting.

<<Environmental Setting 1>>

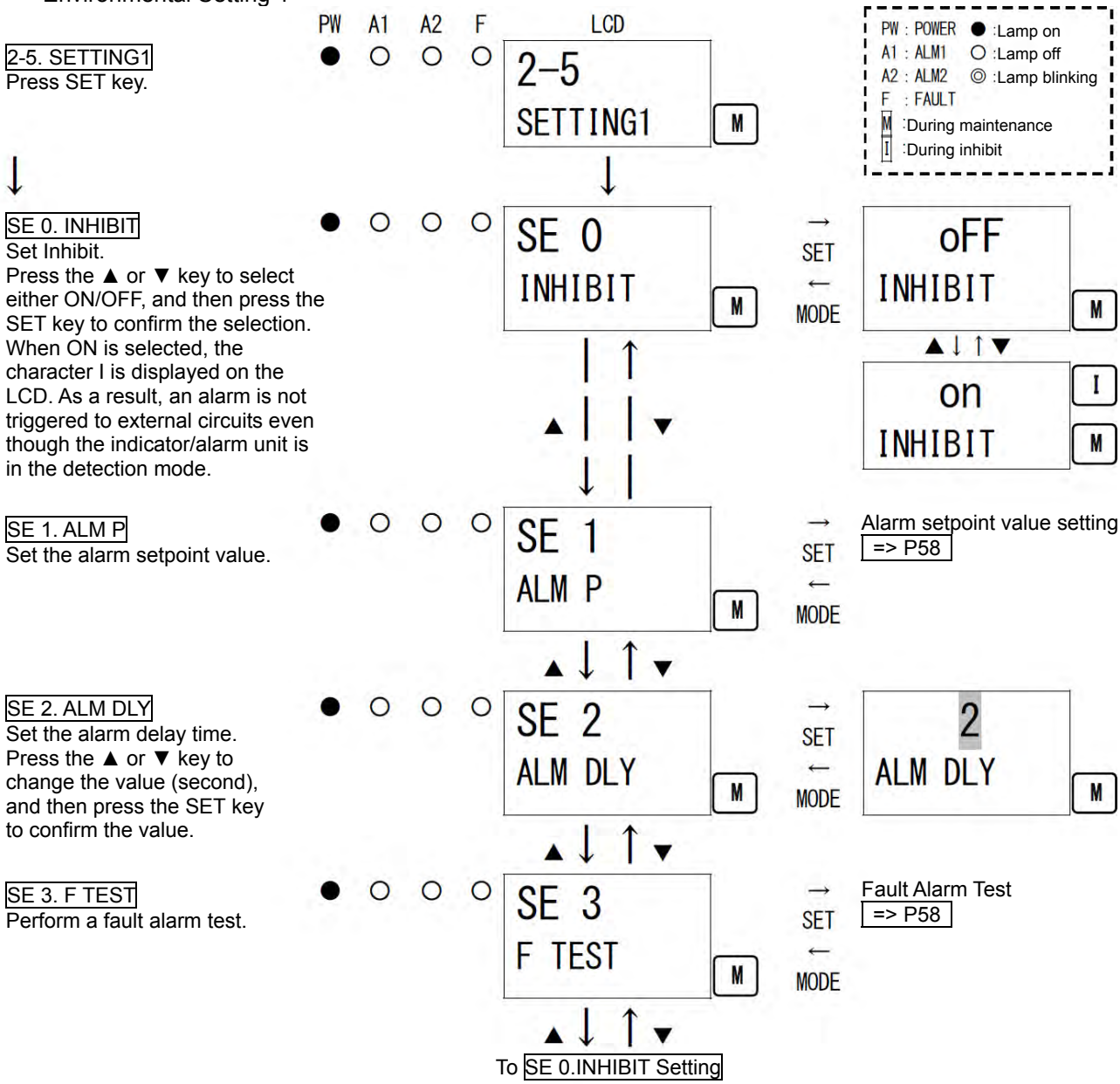

<Alarm Setpoint Value Setting 1 "2-5" - "SET 1">

<<Alarm Setpoint Value Setting>>

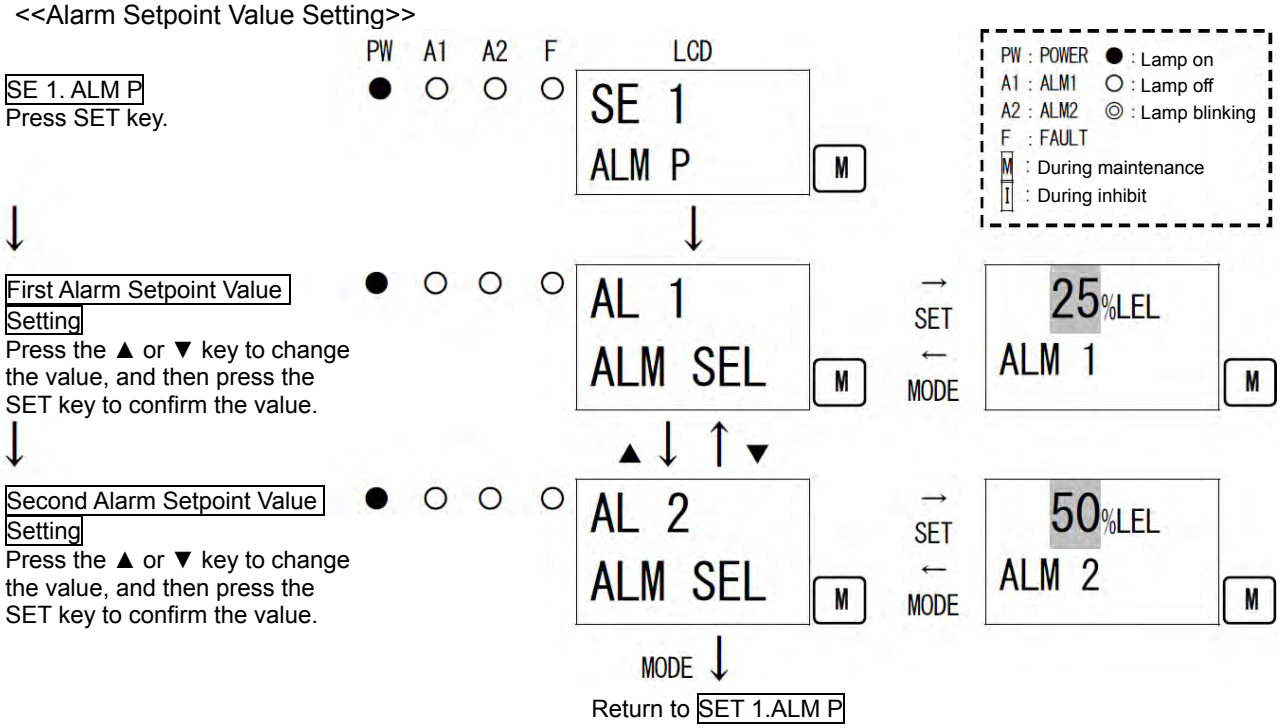

<Fault Alarm Test "2-5" - "SET 3">

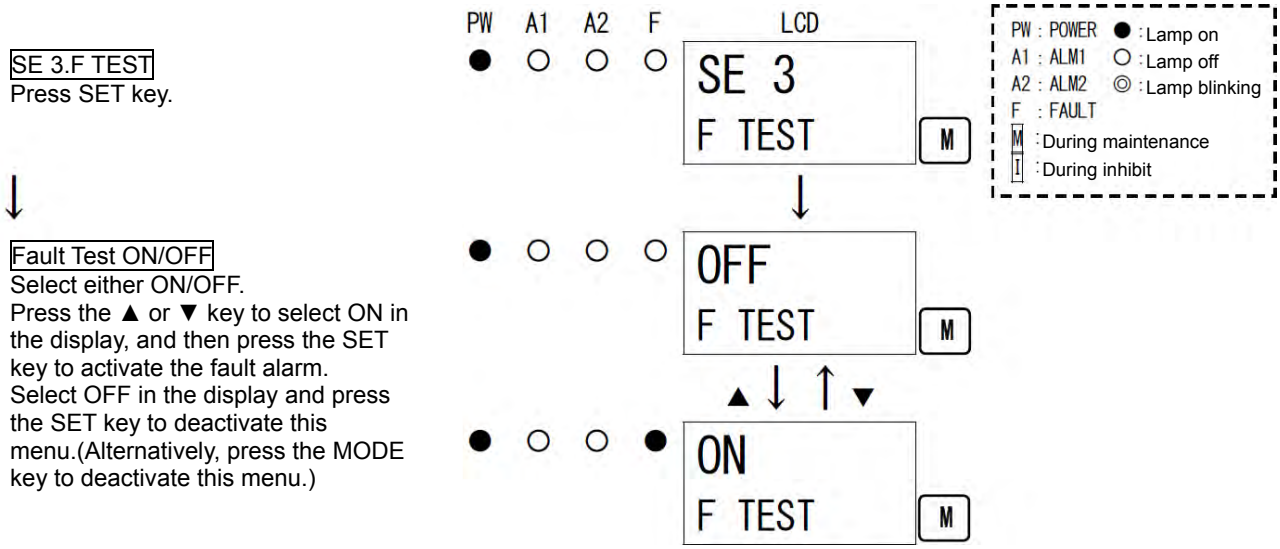

WARNING

Because the contact (fault) can be activated only by a fault alarm test in the maintenance mode, be careful to perform the test. The fault alarm test cannot be performed during inhibit (I).

<Environmental Setting 2 "2-6">

In the environmental setting 2, specify the settings of functions. (* It is recommended that setting changes should be recorded in a log.)
The environmental setting 2 includes setting menus which are usually not used. Be careful not to change these settings by mistake.

<<Environmental Setting 2>>

PW : POWER ● : Lamp on
A1 : ALM1 ○ : Lamp off
A2 : ALM2 ◎ : Lamp blinking
F : FAULT
M : During maintenance
I : During inhibit

PW A1 A2 F LCD

2-6. SETTING2
Press SET key.

● ○ ○ ○ 2-6 SETTING2 M

↓

SE 0. ADDRESS
Set the RS-485 communication address.(Model with an option mounted)
Press the ▲ or ▼ key to change the value, and then press the SET key to confirm the value.

● ○ ○ ○ SE 0 ADDRESS M → SET ← MODE 1 ADDRESS M

▲ ↓ ↑ ▼

SE 1. DAY TIME
Set the RS-485 communication Set the date/time of the main unit.

● ○ ○ ○ SE 1 DAY TIME M → SET ← MODE

Date/Time Setting
=> P62

▲ ↓ ↑ ▼

SE 2. SUPPRESS
Set the suppression value.
Press the ▲ or ▼ key to change the value, and then press the SET key to confirm the value.

● ○ ○ ○ SE 2 SUPPRESS M → SET ← MODE 6%LEL SUPPRESS M

▲ ↓ ↑ ▼

SE 3. SUP TYPE
Set the suppression type.
Press the ▲ or ▼ key to select either CUT/SLOPE, and then press the SET key to confirm the selection. When CUT (Cut Off) is selected, values exceeding the suppression value are directly displayed. When SLOPE (Slope) is selected, values exceeding the suppression value are gently displayed.

● ○ ○ ○ SE 3 SUP TYPE M → SET ← MODE CUT SUP TYPE M

▲ ↓ ↑ ▼

SLOPE SUP TYPE M

▲ ↓ ↑ ▼

SE 4. TEST RLY
Set the contact activation for an alarm test.
Press the ▲ or ▼ key to select either ON/OFF, and then press the SET key to confirm the selection. When ON is selected, the contact can be activated during an alarm test.

● ○ ○ ○ SE 4 TEST RLY M → SET ← MODE OFF TEST RLY M

▲ ↓ ↑ ▼

ON TEST RLY M

▲ ↓ ↑ ▼

SE 5. TEST4-20
Set the external output for an alarm test.

● ○ ○ ○ SE 5 TEST4-20 M → SET ← MODE ON TEST4-20 M

Press the ▲ or ▼ key to select either ON/OFF, and then press the SET key to confirm the selection. When ON is selected, the test concentration is output as the external output during an alarm test.
When OFF is selected, the output is kept at the one before the alarm test mode is entered.

SE 6. RLY PTRN
Select either energized/de-energized for the contact.

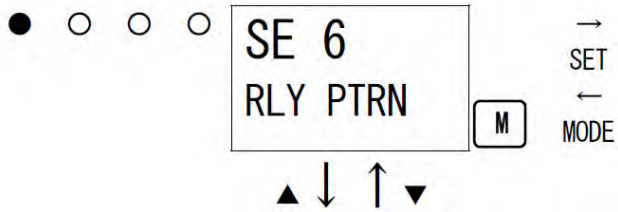

Energized/De-energized Contact Setting
=> P63

SE 7. ALM TYPE
Set the alarm type.(You can select either L-LL, L-H, or H-HH.)

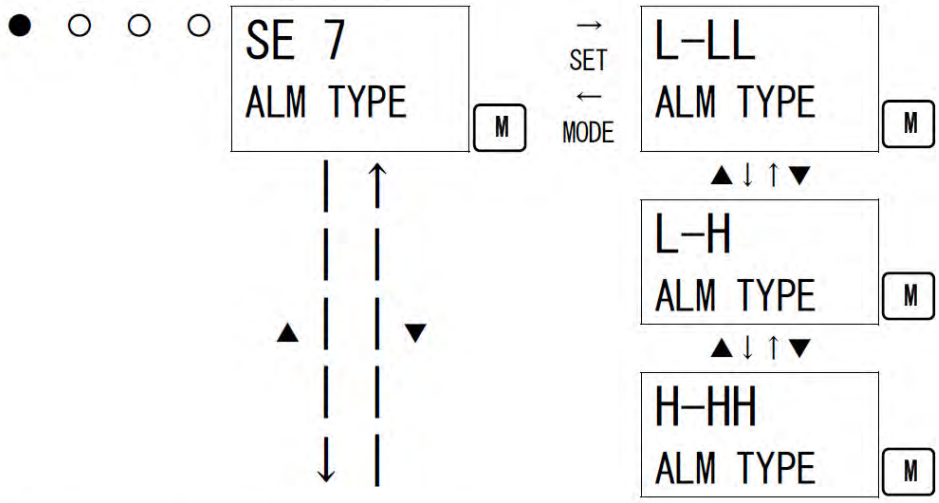

SE 8. ALM PTRN
This is a setting screen of the gas alarm pattern. Do not change the setting when the indicator/alarm unit is used in a normal way, because it determines how the indicator/alarm unit functions.
(Initial setting: Self-latching "L")

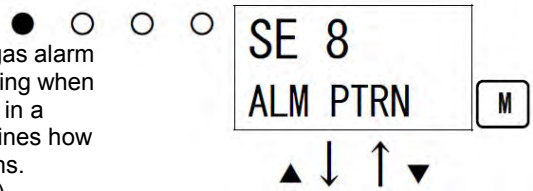

SE 9. AL LIMIT
This is a setting screen of the alarm value limiter. Do not change the setting when the indicator/alarm unit is used in a normal way. (Initial setting: ON)

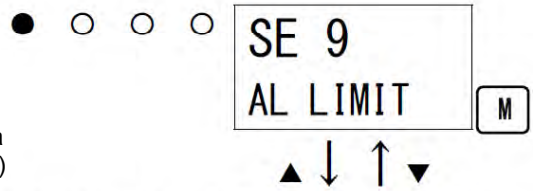

SE 10. FLT PTRN
This is a setting screen of the fault alarm pattern. Do not change the setting when the indicator/alarm unit is used in a normal way, because it determines how the indicator/alarm unit functions.
(Initial setting: Auto-reset "nL")

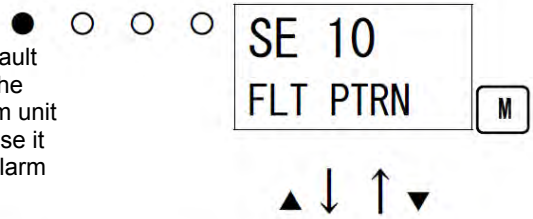

SE 11. ZERO F
Set the zero follower.
Press the ▲ or ▼ key to select either ON/OFF, and then press the SET key to confirm the selection.
When ON is selected, the zero follower function is activated.

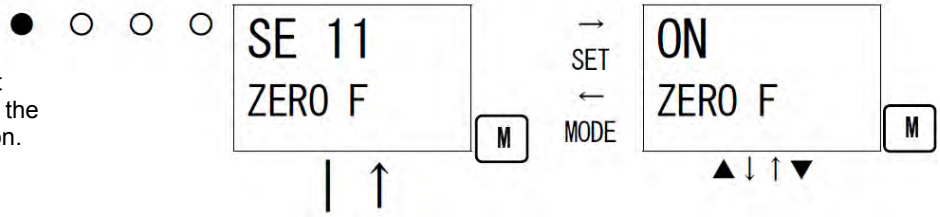

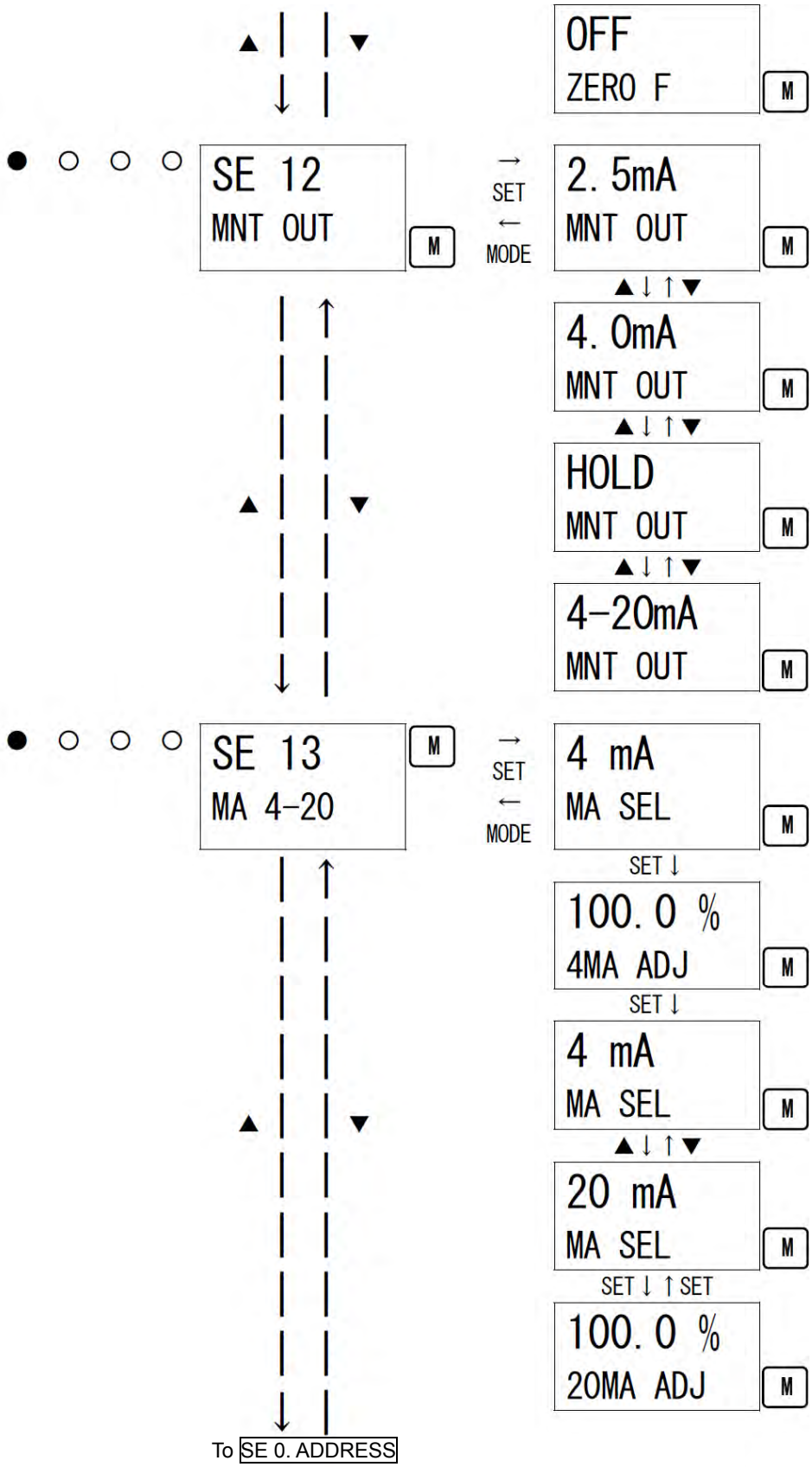

SE 12. MNT OUT
Set the external output for the maintenance mode.
Press the ▲ or ▼ key to select either 2.5 mA/4.0 mA /HOLD (previous value)/4 - 20 mA (linked to display value), and then press the SET key to confirm the selection.

SET 13. MA 4-20
Adjust the external output (4 - 20 mA).
After selecting 4 mA or 20 mA, press the SET key to enable adjustment.
After adjustment of 4 mA is completed, perform the adjustment of 20 mA.
Press the ▲ or ▼ key to select the output (%), and then press the SET key to confirm the value.(It must be adjusted to the upper unit or the ammeter. Press the MODE key to skip this menu during the operation.)

<Alarm Value Setting 2 "2-6" - "SET 1">

<<Date/Time Setting>>

PW : POWER ● : Lamp on
A1 : ALM1 ○ : Lamp off
A2 : ALM2 ◎ : Lamp blinking
F : FAULT
M : During maintenance
I : During inhibit

	PW	A1	A2	F	LCD	
SE 1. DAY TIME Press SET key.	●	○	○	○	SE 1 DAY TIME	M
Date/Time Setting Display Press SET key.	●	○	○	○	1200 20110101	M
Year Setting Press the ▲ or ▼ key to change the value, and then press the SET key to confirm the value.	●	○	○	○	1200 20110101	M
Month Setting Press the ▲ or ▼ key to change the value, and then press the SET key to confirm the value.	●	○	○	○	1200 20110101	M
Date Setting Press the ▲ or ▼ key to change the value, and then press the SET key to confirm the value.	●	○	○	○	1200 20110101	M
Hour Setting Press the ▲ or ▼ key to change the value, and then press the SET key to confirm the value.	●	○	○	○	1200 20110101	M
Minute Setting Press the ▲ or ▼ key to change the value, and then press the SET key to confirm the value.	●	○	○	○	1200 20110101	M

Return to SE 1. DAY TIME

* In the Date/Time Setting mode, press the MODE key to cancel this menu and go back to the previous setting.

<Energized/De-Energized Contact Setting "2-6" - "SET 6">

<<Energized/De-Energized Contact Setting>>

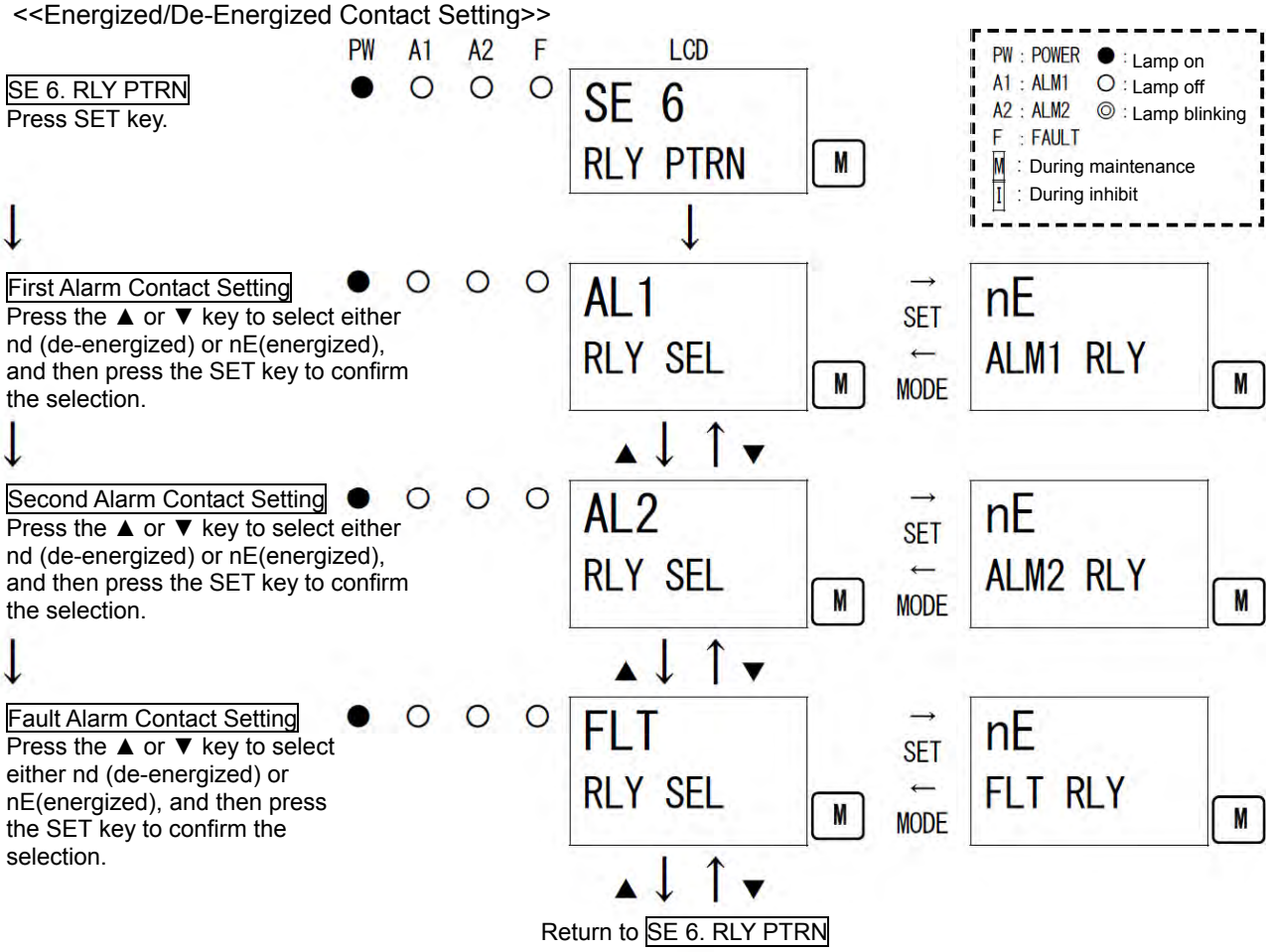

NOTE

When de-energized is selected, the relay is energized and activated in response to an alarm (de-energized at a normal environment).

- When the contact "a" is used, it is open at a normal environment while closed in response to an alarm.
- When the contact "b" is used, it is activated conversely.

When energized is selected, the relay is energized at a normal environment (de-energized in response to an alarm).

- When the contact "a" is used, it is closed at a normal environment while open in response to an alarm. In addition, it is open when the power is OFF.
- When the contact "b" is used, it is activated conversely.

NOTE

To change the settings of the contact specifications (the "a" or "b" contact), please contact RIKEN KEIKI.

<Environmental Setting 3 "2-7">

In the environmental setting 2, specify the settings of functions. (* It is recommended that setting changes should be recorded in a log.)
The environmental setting 2 includes setting menus which are usually not used. Be careful not to change these settings by mistake.

<<Environmental Setting 2>>

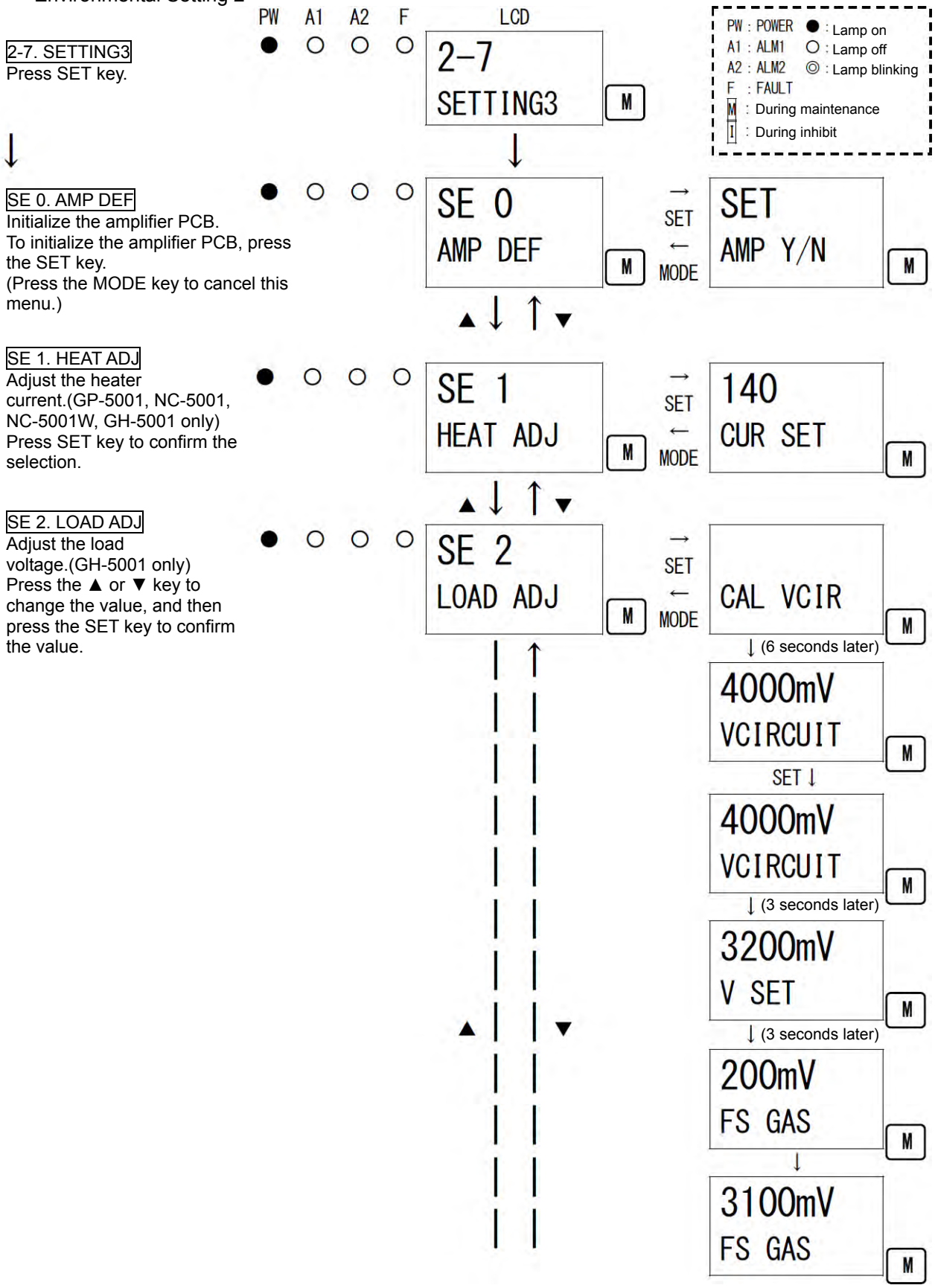

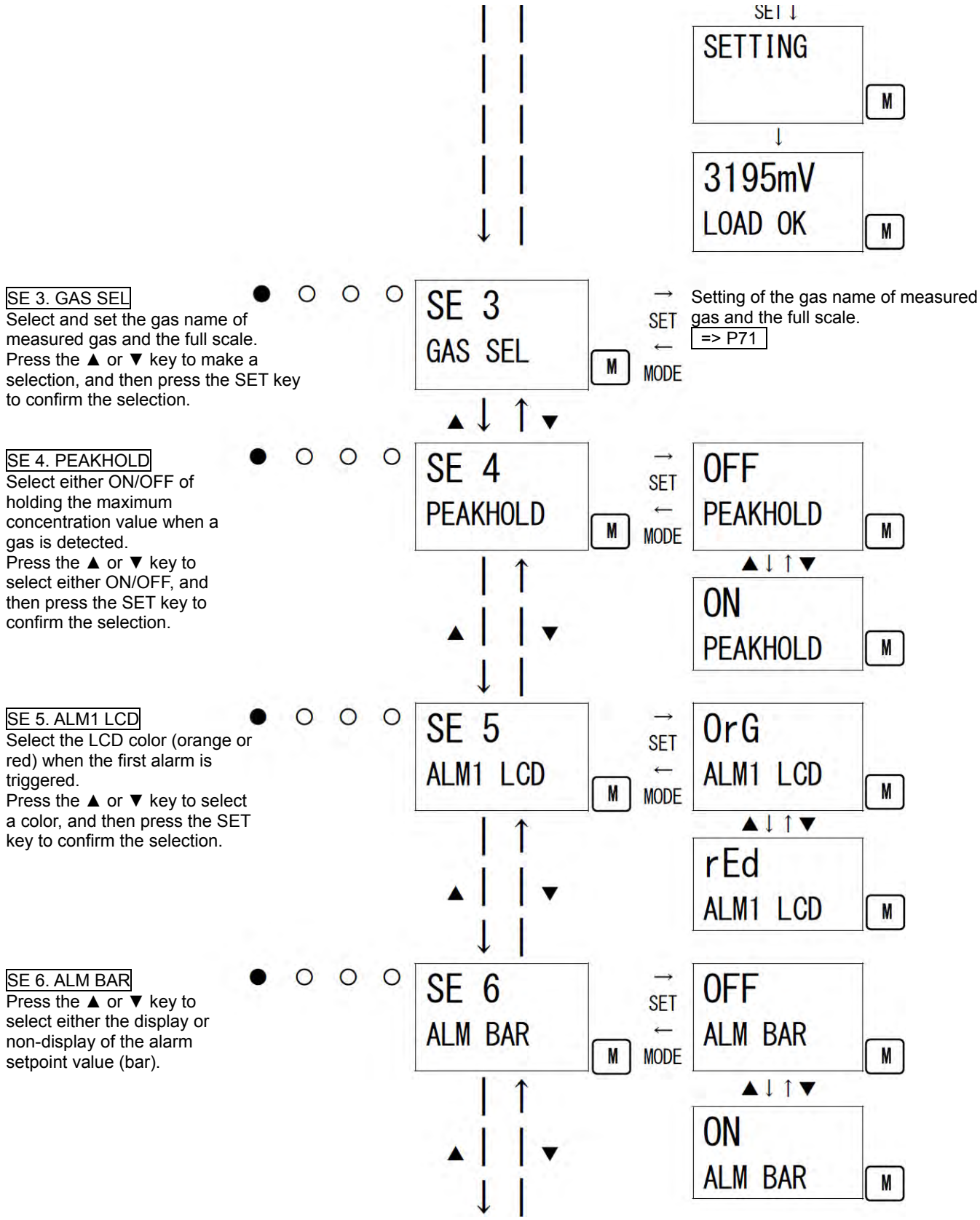
SET ↓
SETTING
M
3195mV
LOAD OK
M
SE 3. GAS SEL
Select and set the gas name of measured gas and the full scale.
Press the ▲ or ▼ key to make a selection, and then press the SET key to confirm the selection.
SE 3
GAS SEL
M
→ SET
← MODE
Setting of the gas name of measured gas and the full scale.
=> P71
SE 4. PEAKHOLD
Select either ON/OFF of holding the maximum concentration value when a gas is detected.
Press the ▲ or ▼ key to select either ON/OFF, and then press the SET key to confirm the selection.
SE 4
PEAKHOLD
OFF
PEAKHOLD
ON
PEAKHOLD
SE 5. ALM1 LCD
Select the LCD color (orange or red) when the first alarm is triggered.
Press the ▲ or ▼ key to select a color, and then press the SET key to confirm the selection.
SE 5
ALM1 LCD
OrG
ALM1 LCD
rEd
ALM1 LCD
SE 6. ALM BAR
Press the ▲ or ▼ key to select either the display or non-display of the alarm setpoint value (bar).
SE 6
ALM BAR
OFF
ALM BAR
ON
ALM BAR

SE 7. DR OUT
Set the double range external output.

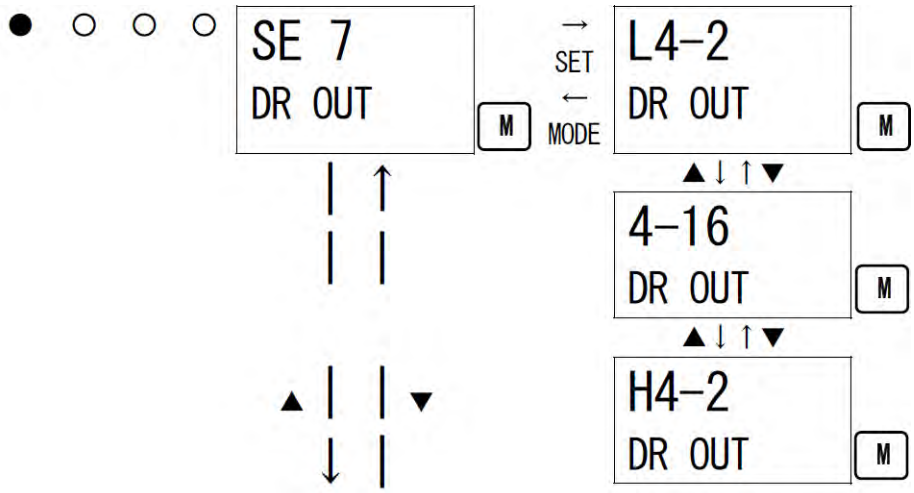

SE 8. FLOW SET
Select either ON or OFF of the low flow rate alarm activation.

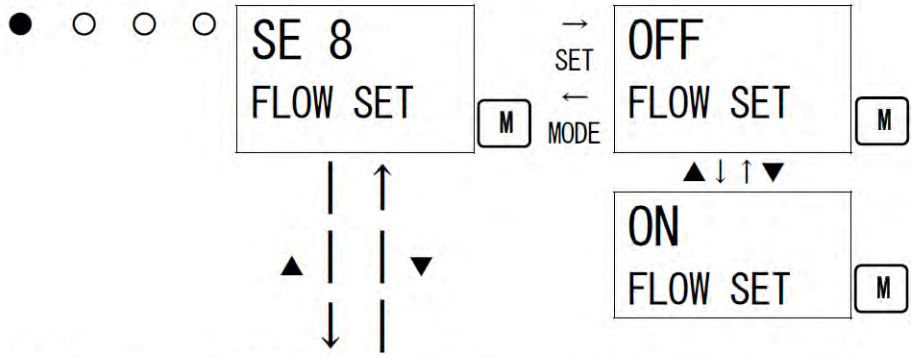

SE 9. OUT SET
Set the resolution of external output.
Press the ▲ or ▼ key to select either the same number of divisions as the display (standard setting) or 1000 divisions, and then press the SET key to confirm the selection.

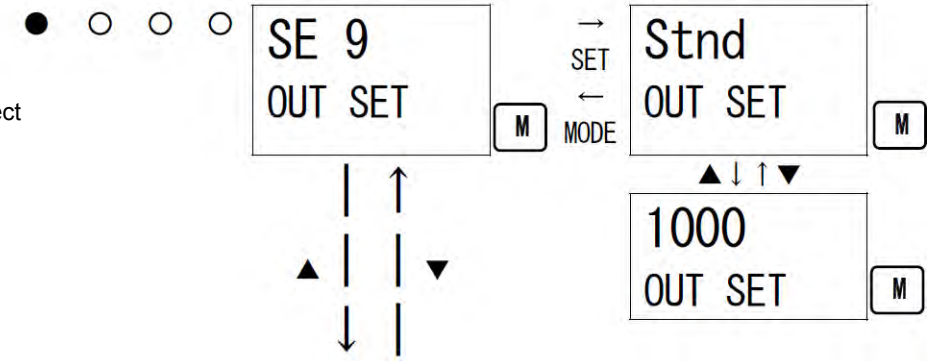

SE 10. 485 PTRN
Set the RS-485 communications.(Only on a model with an option mounted)

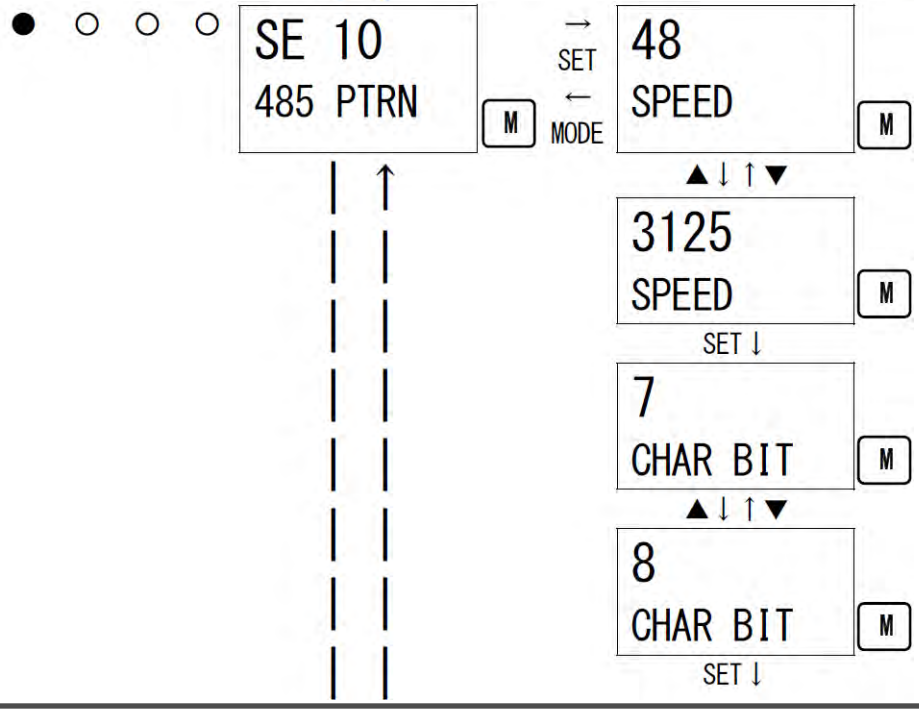

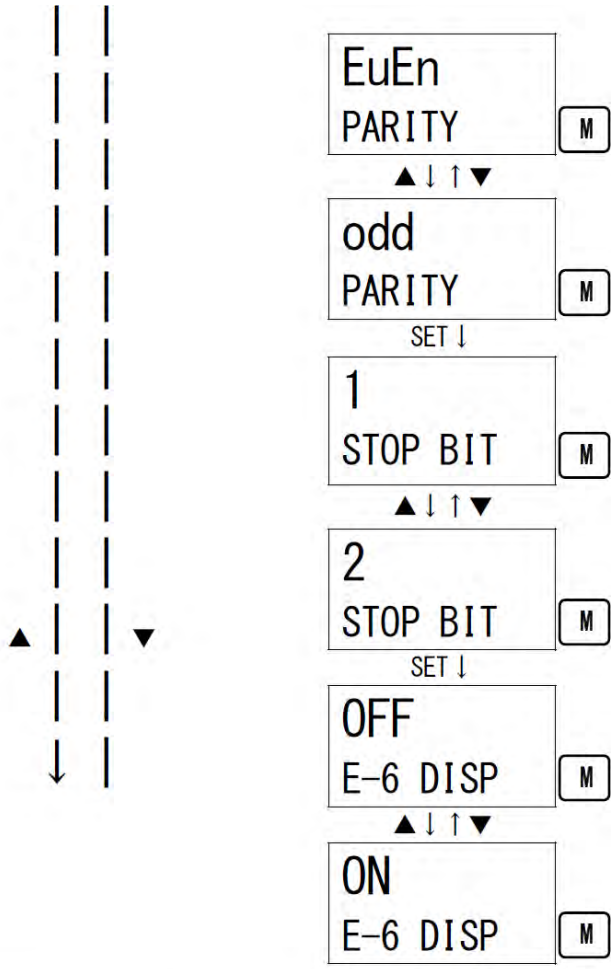

SE 11. GRN ADJ
Adjust the brightness of the LCD backlight (green LED). Press the ▲ or ▼ key to increase or decrease the value to adjust the brightness, and then press the SET key to confirm the value.

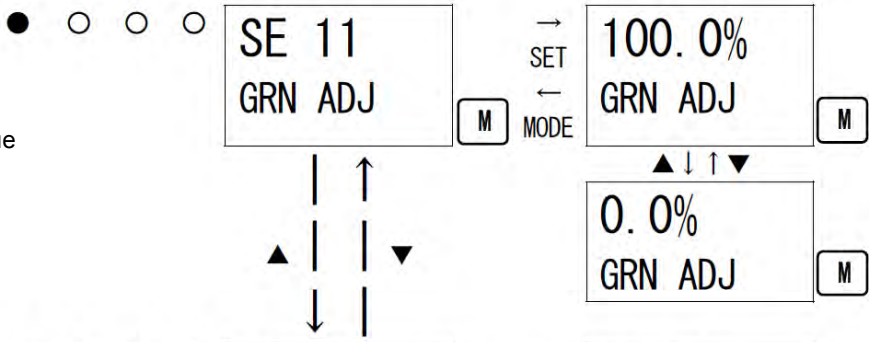

SE 12. RED ADJ
Adjust the brightness of the LCD backlight (red LED). Press the ▲ or ▼ key to increase or decrease the value to adjust the brightness, and then press the SET key to confirm the value.

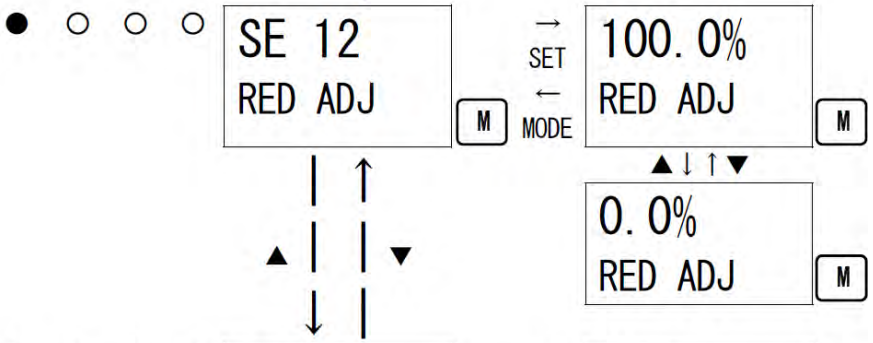

SE 13. ORG ADJ
Adjust the brightness of the LCD backlight (orange LED). Press the ▲ or ▼ key to increase or decrease the value to adjust the brightness, and then press the SET key to confirm the value.

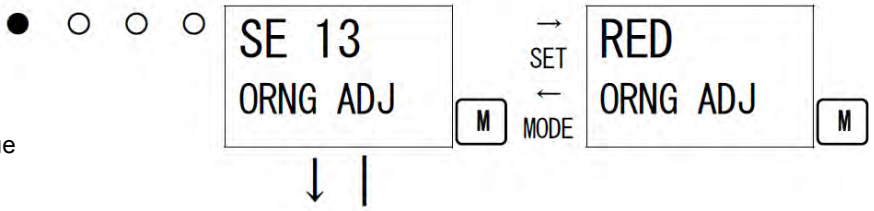

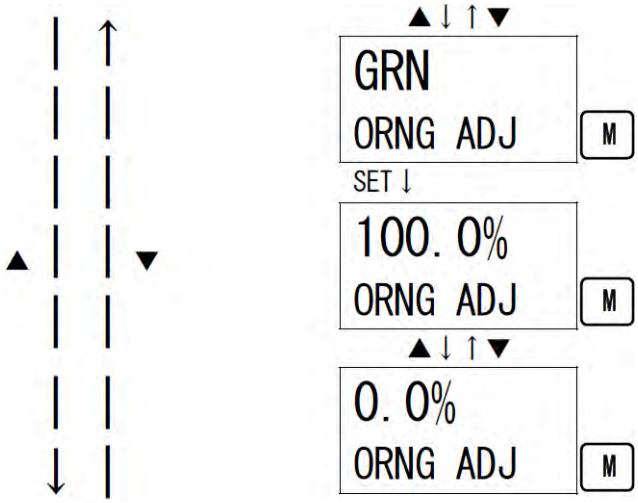

To SE 0. ADDRESS

7-3. Gas calibration method

Perform a gas calibration on the detector head (sensor) connected to the indicator/alarm unit in each mode (zero adjustment mode and span adjustment mode) using the calibration gas.

- Zero adjustment gas (collected in a gas sampling bag)
- Span gas (collected in a gas sampling bag)
- Gas sampling bags

WARNING

After the adjustment is completed, never fail to press the MODE key to return to the detection mode.

<Zero Adjustment "2-1">

This is used to perform the zero adjustment on the detector head (sensor).

WARNING

When the zero adjustment is performed in the atmosphere, check the atmosphere around the detector head (sensor) for freshness before beginning the adjustment. If other gases exist, the adjustment cannot be performed properly, thus leading to dangers when the gas leaks.

NOTE

Before starting the zero adjustment, supply the zero adjustment gas to the detector head (sensor) and wait until the reading is stabilized.

<<Zero Adjustment>>

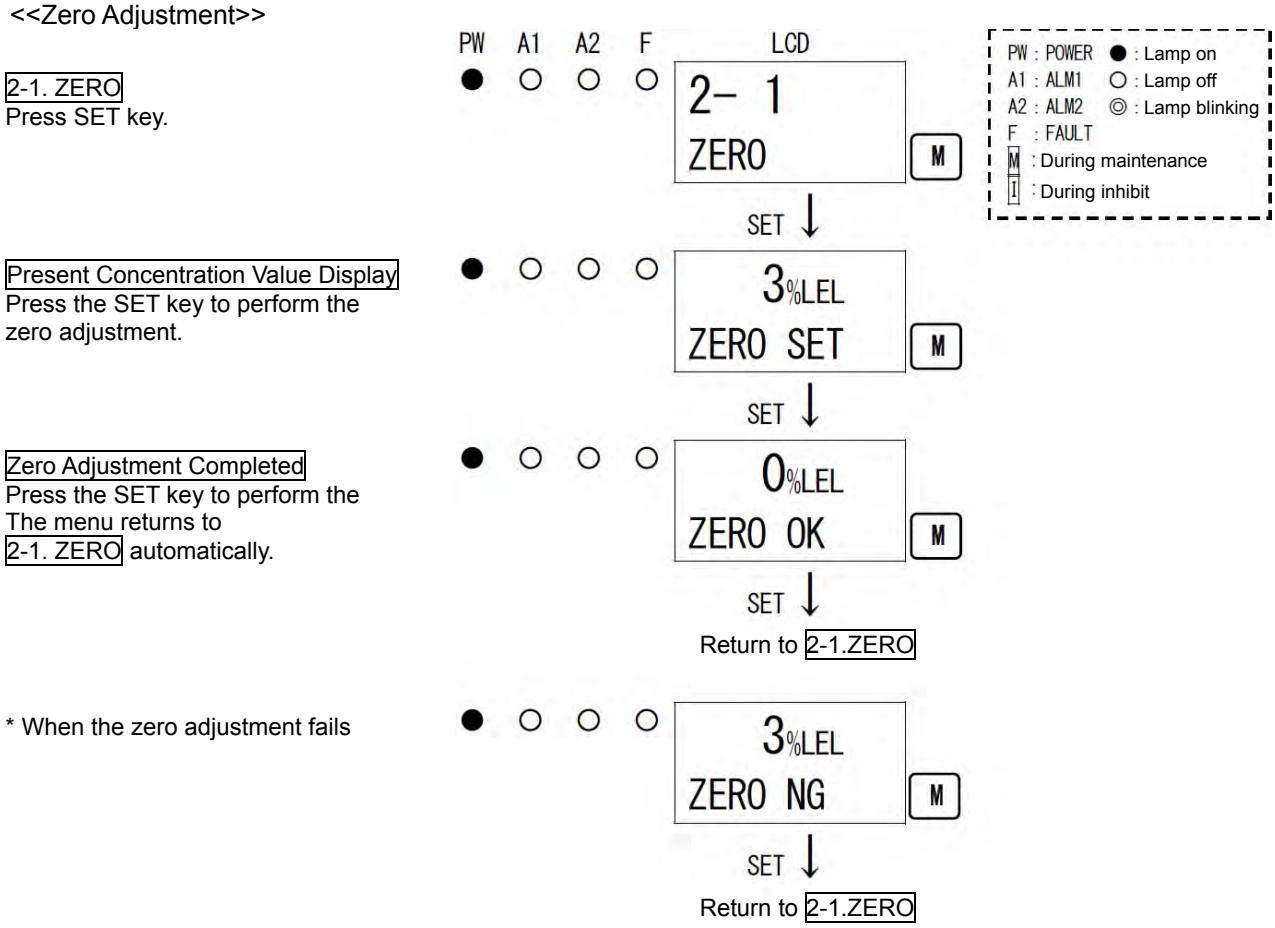

<Span Adjustment "2-2">

This is used to perform the span adjustment on the detector head (sensor). For the oxygen deficiency alarm specification (O2: 0 - 25 vol%), this is the same as “1-1”.

<<Span Adjustment Display>>

PW : POWER ● :Lamp on
A1 : ALM1 ○ :Lamp off
A2 : ALM2 ◎ :Lamp blinking
F : FAULT
M : During maintenance
I : During inhibit

	PW	A1	A2	F	LCD
2-2. SPAN Press SET key.	●	○	○	○	2-2 SPAN
					SET ↓
Gas Introduction Introduce a gas to the connected detector head (sensor), and then press the SET key when the reading is stabilized. * In case of less than 10%FS, this is not switched to the next menu.	●	○	○	○	40%LEL SPAN GAS
					SET ↓
Span Adjustment Because the reading will be fixed, adjust the introduced gas concentration by pressing the ▲ or ▼ key. After adjusting the value, press the SET key. (20.9 vol% in the oxygen deficiency alarm specification)	●	○	○	○	40%LEL SPAN VAL
					SET ↓
Span Adjustment Completed	●	○	○	○	40%LEL SPAN OK
					↓
Adjustment Result Recording To record the adjustment result, press the SET key. (Press the MODE key to cancel this menu.)	●	○	○	○	40%LEL SPAN Y/N
					SET ↓
Adjustment Completed The menu returns to 2-2. SPAN automatically.	●	○	○	○	40%LEL SPAN END
					↓ Return to 2-2. SPAN
* When the span adjustment fails	●	○	○	○	40%LEL SPAN NG
					SET ↓ Return to 2-2. SPAN

CAUTION

Do not press the SET key before the reading is stabilized.

CAUTION

Exhaust gas must be collected in the exhaust bag or discharged through the exhaust line.

<Setting of Gas Name of Measured Gas and Full Scale "2-7" - "SET 3">

<<Setting of Gas Name of Measured Gas and Full Scale>>

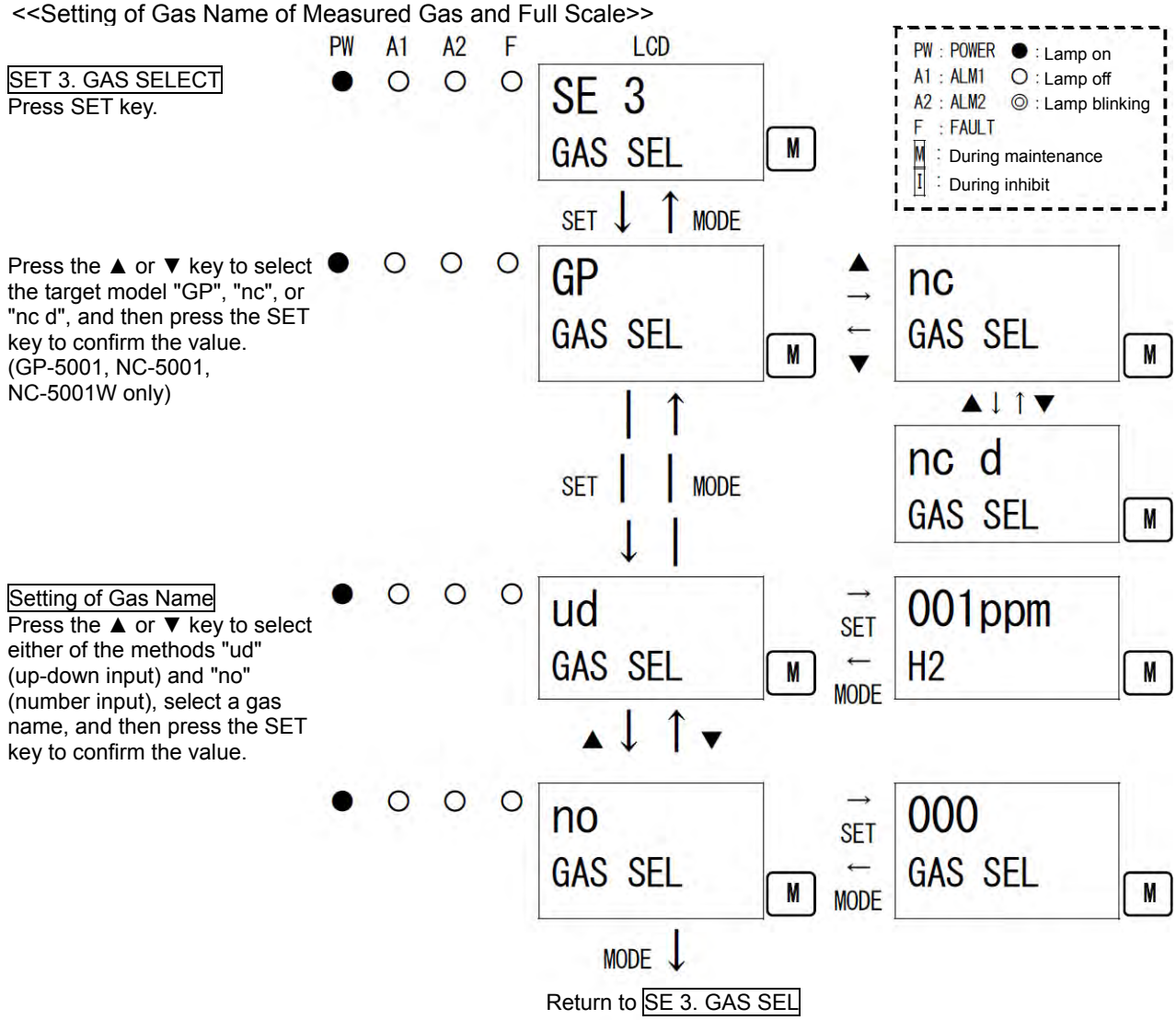

7-4. How to clean

Clean the indicator/alarm unit if it becomes extremely dirty. The indicator/alarm unit must be turned off while cleaning it. Use a waste cloth to remove dust. Do not use water or organic solvent for cleaning because they may cause malfunctions.

7-5. How to replace the fuse

Make sure that the power switch of the indicator/alarm unit is OFF.
Pull out the fuse from the fuse holder (see the figure on the right).
Insert a new fuse in the fuse holder.

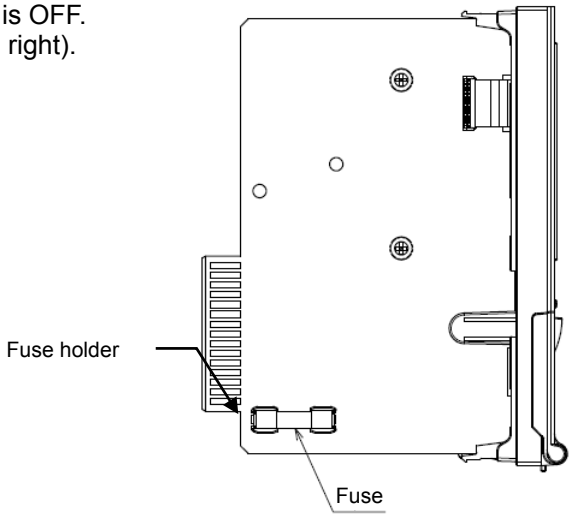

WARNING

To prevent fire, use a fuse with the specified ratings for the indicator/alarm unit.
Turn the POWER switch OFF and disconnect the power plug from the outlet before replacing a fuse. Do not use an unspecified fuse or short-circuit the fuse holder.
For more information on fuses, please contact RIKEN KEIKI.

8

Storage, Relocation and Disposal

8-1. Procedures to store the indicator/alarm unit or leave it for a long time

The indicator/alarm unit must be stored under the following environmental conditions.

- In a dark place under the normal temperature and humidity away from direct sunlight
- In a place where gases, solvents or vapors are not present
- In a place free from vibrations or shocks

8-2. Procedures to relocate the indicator/alarm unit or use it again

When the indicator/alarm unit is relocated, select a new place in accordance with “4-2. Precautions for installation points” and “4-4. How to install”.
For information on wiring, see “4-5. How to wire". The unpowered time for the detector head (sensor) or indicator/alarm unit must be minimized when the device unit is relocated.

CAUTION

When using a relocated or stopped/stored indicator/alarm unit again, never fail to perform a gas calibration. For information on readjustment including gas calibration, please contact RIKEN KEIKI.

8-3. Disposal of products

When the indicator/alarm unit is disposed of, it must be treated properly as an industrial waste in accordance with the local regulations.

9

Troubleshooting

The troubleshooting does not explain the causes of all the malfunctions which occur on the indicator/alarm unit. This simply helps to find the causes of malfunctions which frequently occur. If the indicator/alarm unit shows a symptom which is not explained in this manual, or still has malfunctions even though remedial actions are taken, please contact RIKEN KEIKI.

NOTE

Read also the operating manual of the detector head connected to the indicator/alarm unit.

●: Lamp on
○: Lamp off

<Abnormalities on Unit>

Symptom/Display	FAULT	Causes	Actions
The power cannot be turned on.	–	The power switch is turned off.	Turn ON the power switch.
		Fuse open-circuit	Find out why the fuse has blown and take appropriate actions before replacing it.
		Incorrect connection of power cable	Check the terminal plate and correct the incorrect wiring.
		Abnormalities/momentary blackout of power supply system	Provide the rated voltage. Take measures such as checking or adding the UPS, power supply line filter and insulation transformer.
		Cable abnormalities (open circuit/not connected/short circuit)	Check the wiring of indicator/alarm unit and related devices around it.
Abnormal operations	○	Disturbances by sudden surge noise, etc.	Turn off and restart the indicator/alarm unit. If such a symptom is observed frequently, take appropriate measures to eliminate the noise.
Span adjustment impossible	○	Calibration gas concentration	Use the proper calibration gas.
		Sensor sensitivity deterioration	Replace the sensor.
Detector head abnormalities E-1 DETECTOR (EC-5002, OX-5002, RM-5002, RM-5003 only)	●	Fault on the detector head (fault, 4 - 20 mA open-circuit, and low flow rate)	Recover from the fault on the detector head.
		Cable open-circuit between the indicator/alarm unit and the detector head	Restore the cable connection between the indicator/alarm unit and the detector head.
Sensor abnormalities E-1A SENSOR (GP-5001, NC-5001, GH-5001, OX-5001 only)	●	Amplifier PCB connection abnormalities	Check the harness between the amplifier PCB and the main PCB for connections.
		Sensor open-circuit and short-circuit in the detector head	Connect the cable between the indicator/alarm unit and the detector head (sensor) properly or replace the sensor.
		Abnormalities in current supply to the sensor	Readjust the heater current.
		Abnormalities in voltage supply to the sensor	Readjust the load voltage.
		Zero follower abnormalities	Perform the zero adjustment.
Flow rate abnormalities E-5d (EC-5002, OX-5002, RM-5002, RM-5003 only)	●	Flow loss on the detector head	Recover from the flow rate abnormality on the detector head. For more information, see the operating manual of the detector head.
Communication abnormalities E-6 (Only on a model with RS-485 (option) mounted)	●	Abnormalities in communications with the upper unit	Please contact RIKEN KEIKI.
System abnormalities E-9	●	Clock abnormalities	Please contact RIKEN KEIKI.
System abnormalities E-9 SYSTEM	●	Abnormalities of ROM, RAM, or EEPROM on the main PCB	Please contact RIKEN KEIKI.
		Power voltage abnormalities on the main PCB	Please contact RIKEN KEIKI.
System abnormalities E-9A SYSTEM	●	Abnormalities of ROM or RAM on the amplifier PCB	Please contact RIKEN KEIKI.
		Reference voltage abnormalities on the amplifier PCB	Please contact RIKEN KEIKI.

<Abnormalities of Readings>

Symptoms	Causes	Actions
The reading rises (drops) and it remains so.	Drifting of sensor output	Perform the zero adjustment (fresh air adjustment).
	Presence of interference gas	Disturbances by interference gases, such as solvents, cannot be eliminated completely. For information on actions, such as removal filter, please contact RIKEN KEIKI.
	Slow leak	A very small amount of the gas to be detected may be leaking (Slow leak). Because ignoring it may cause dangers, take a remedial measure, i.e., taking actions the same as those for the gas alarm.
	Environmental changes	Perform the zero adjustment (fresh air adjustment). In particular, the galvanic cell type is affected by the air pressure.
A gas alarm is triggered despite of no gas leak and no other abnormalities at the detection point.	Presence of interference gas	Disturbances by interference gases, such as solvents, cannot be eliminated completely. For information on actions, such as removal filter, please contact RIKEN KEIKI.
	Disturbance by noise	Turn off and restart the indicator/alarm unit. If such a symptom is observed frequently, take appropriate measures to eliminate the noise.
	Sudden change in the environment	When the environment (temperature, etc.) changes suddenly, the indicator/alarm unit cannot adjust to it and is affected by it. In some cases, the indicator/alarm unit triggers an indication alarm. Because the indicator/alarm unit cannot be used under sudden and frequent environmental changes, you must take any preventive actions to eliminate them.
Slow response	Clogged dust filter	Replace the dust filter.
	Bended or clogged suction tube or exhaust tube	Fix the defective parts.
	Condensation is formed inside the suction tube.	Fix the defective parts.
	Deteriorated sensor sensitivity	Replace the sensor unit with a new one.
Span adjustment impossible	Improper calibration gas concentration	Use the proper calibration gas.
	Deteriorated sensor sensitivity	Replace the sensor unit with a new one.

10

Product Specifications

10-1. List of specifications

<Common Specifications>

Concentration display	Character LCD (digital and bar meter display <three colors: green, orange, and red>)
Power display	POWER lamp on (green)
Gas alarm display	First: ALM1 lamp blinks or lights up (red)/Second: ALM2 lamp blinks or lights up (red)
Gas alarm pattern	Self-latching, auto-reset, or lock-in
Gas alarm contact	No-voltage contact 1a or 1b (2 step independent) De-energized (energized at an alarm) or energized (de-energized at an alarm)
Fault alarm/self diagnosis	System abnormalities/detection circuit abnormalities/communication abnormalities (digital transmission only)
Fault alarm display	FAULT lamp blinking (orange)/Detail display
Fault alarm pattern	Auto-reset
Fault alarm contact	No-voltage contact 1a or 1b De-energized (energized at an alarm) or energized (de-energized at an alarm)
Contact capacity	100 VAC - 0.5A/30 VDC - 1.5A (resistant load)
Transmission system	Analog/digital transmission [option]
Transmission specifications	Analog transmission: 4 - 20 mA DC (no-insulation/load resistance under 300 Ω)/Digital transmission: RS-485
Power supply	24 VDC (21.6 – 26.4 VDC)
Initial clear	Approx. 25 seconds
Operating temperatures	-10 – 40°C (at a constant condition)
Operating humidities	10 to 90%RH (Non-condensing)
Structure	Card type with front display used enclosed in a case (a single-unit or multi-unit case)
External dimensions	Approx. 29.6 (W) x 120 (H) x 92 (D) mm (projection portions excluded)
Weight	Approx. 0.10 kg (unit only)

* Specifications subject to changes without notice.

<Specifications for Each Model>

Model	GP-5001	NC-5001	NC-5001W
Gas to be detected	Combustible gas		
Applicable gas detector head	Catalytic combustion type detector head	New ceramic type detector head	
Gas alarm type	Two-step alarm (H-HH)		
Detector head signal	Sensor direct signal		
Cable for gas detector head	CVV, etc. (1.25 sq or 2.0 sq) - 4-core		
Distance to gas detector head	2 km or less for CVV - 2.0 sq		
Functions	Alarm delay/Suppression/Zero follower/Peak hold/Calibration history/Alarm trend history/Event history		
Power consumption	Max. 7 W (including the gas detector head; Approx. 10 VA if a multi-unit case is used)		
Model	NP-5001	SP-5001	GH-5001
Gas to be detected	High concentration gas	Combustible/toxic gas	
Applicable gas detector head	Thermal conductivity type detector head	Hot-wire semiconductor type detector head	Semiconductor type detector head
Gas alarm type	Two-step alarm (H-HH)		
Detector head signal	Sensor direct signal		
Cable for gas detector head	Shielded cable of CVVS, etc. (1.25 sq or 2.0 sq) - 4-core	Cable of CVV, etc. (1.25 sq or 2.0 sq) - 4-core	Cable of CVVS, etc. (1.25 sq or 2.0 sq) - 3-core
Distance to gas detector head	2 km or less for CVVS - 2.0 sq	2 km or less for CVV - 2.0 sq	2 km or less for CVVS - 2.0 sq
Functions	Alarm delay/Suppression/Peak hold/Calibration history/Alarm trend history/Event history		
Power consumption	Max. 7 W (including the gas detector head; Approx. 10 VA if a multi-unit case is used)		

Model	EC-5002	OX-5001	OX-5002
Gas to be detected	Toxic gas	Oxygen	
Applicable gas detector head	Electrochemical type detector head/ Pyrolysis-particle type detector head	Galvanic cell type detector head	
Gas alarm type	Two-step alarm (H-HH)	Two-step alarm (H-HH or L-H, L-LL)	
Detector head signal	Current signal (4 - 20 mA DC)	Sensor direct signal	Current signal (4 - 20 mA DC)
Cable for gas detector head	Shielded cable of CVVS, etc. (1.25 sq or 2.0 sq) - 2-core		
Distance to gas detector head	2 km or less for CVVS - 2.0 sq	600 m or less for CVVS - 2.0 sq	2 km or less for CVVS - 2.0 sq
Functions	Alarm delay/Suppression/Peak hold/Calibration history/Alarm trend history/Event history	Alarm delay/Peak hold/Calibration history/Alarm trend history/Event history	
Power consumption	Max. 3 W (including the gas detector head; Approx. 3 VA if a multi-unit case is used)	Max. 2 W (including the gas detector head; Approx. 2 VA if a multi-unit case is used)	Max. 3 W (including the gas detector head; Approx. 3 VA if a multi-unit case is used)

Model	RM-5002	RM-5003
Gas to be detected	Depends on the connected gas detector head.	
Applicable gas detector head	Gas detector head that outputs general measurement signals	Various detector heads
Gas alarm type	Two-step alarm (H-HH or L-H, L-LL)	
Detector head signal	Current signal (4 - 20 mA DC)	
Cable for gas detector head	Shielded cable of CVVS, etc. (1.25 sq or 2.0 sq) - 2-core	Shielded cable of CVVS, etc. (1.25 sq or 2.0 sq) - 3-core (power, signal, and common)
Distance to gas detector head	Depends on the connected gas detector head.	
Functions	Alarm delay/Peak hold/Alarm trend history/Event history	
Power consumption	Max. 2 W (including the gas detector head; Approx. 2 VA if a multi-unit case is used)	Max. 8 W (including the gas detector head; Approx. 11 VA if a multi-unit case is used)

10-2. Product components

- Main unit
- Operating manual (One copy per system regardless of the number of units to be delivered)

11

Definition of Terms

%LEL	A percentage unit of the concentration of a combustible gas assuming the lower explosive limit (LEL) of the combustible gas as 100. LEL (Lower Explosion Limit) refers to the lowest concentration of a combustible gas in air capable of causing explosion when ignited.
vol%	Gas concentration indicated in the unit of one-hundredth of the volume
ppm	Gas concentration indicated in the unit of one-millionth of the volume
Calibration	Find relationship of the readings, display values or setpoints with the actual values by using the calibration gas.
Maintenance mode	When maintenance is performed on the indicator/alarm unit, the alarm contact is disconnected, and a signal to indicate the maintenance mode status is sent out to the external output signal. As a result, maintenance can be performed on a single unit of the indicator/alarm unit.
Initial clear	The reading is unstable for seconds after the power is turned on. To prevent malfunctions for that period, the alarm contact is deactivated. In addition, a signal to indicate the initial clear status is sent out to the external output.
Zero suppression	A function to cut off the influences of environmental changes, interference gases, etc.
Alarm delay time	A function which temporarily suspends activation to prevent a false alarm caused by noise from its outside.
Inhibit	The gas detection function is temporarily suspended during maintenance, etc. of the indicator/alarm unit. This is also called "point skip", which has the same function.

Warranty Policy

RIKEN KEIKI CO., LTD., warrants gas alarm equipment sold by us to be free from defects in materials, workmanship, and performance for a period of one year from date of shipment from RIKEN KEIKI CO., LTD., Inc. Any parts found defective within that period will be repaired or replaced, at our option, free of charge. This warranty does not apply to those items which by their nature are subject to deterioration or consumption in normal service, and which must be cleaned, repaired, or replaced on a routine basis.

Warranty is voided by abuse including mechanical damage, alteration, rough handling, or repair procedures not in accordance with the operator's manual. This warranty indicates the full extent of our liability, and we are not responsible for removal or replacement costs, local repair costs, transportation costs, or contingent expenses incurred without our prior approval.

THIS WARRANTY IS EXPRESSLY IN LIEU OF ANY AND ALL OTHER WARRANTIES AND REPRESENTATIONS, EXPRESSED OR IMPLIED, AND ALL OTHER OBLIGATIONS OR LIABILITIES ON THE PART OF RIKEN KEIKI CO., LTD., INCLUDING BUT NOT LIMITED TO, THE WARRANTY OF MERCHANTABILITY OR FITNESS FOR A PARTICULAR PURPOSE. IN NO EVENT SHALL RIKEN KEIKI CO., LTD., BE LIABLE FOR INDIRECT, INCIDENTAL, OR CONSEQUENTIAL LOSS OR DAMAGE OF ANY KIND CONNECTED WITH THE USE OF ITS PRODUCTS OR FAILURE OF ITS PRODUCTS TO FUNCTION OR OPERATE PROPERLY.

This warranty covers instruments and parts sold to users by authorized distributors, dealers, and representatives as appointed by RIKEN KEIKI CO., LTD.

We do not assume indemnification for any accident or damage caused by the operation of this gas monitor, and our warranty is limited to the replacement of parts or our complete goods.